Documento contenuto nel prodotto EUROCODICI edizione 2011. E' vietato l'uso in rete del singolo documento e la sua riproduzione. E' autorizzata la stampa per uso interno.

NORMA EUROPEA

Eurocodice 3

Progettazione delle strutture di acciaio

Parte 1-3: Regole generali - Regole supplementari per l'impiego dei profilati e delle lamiere sottili piegati a freddo

UNI EN 1993-1-3

GENNAIO 2007

Corretta il 11 febbraio 2010

Eurocode 3

Design of steel structures

Part 1-3: General rules - Supplementary rules for cold-formed members and sheeting

La norma riguarda la progettazione di membrature e lamiere grecate di acciaio ottenute mediante piegatura a freddo di prodotti piani laminati a caldo oppure a freddo, rivestiti e non rivestiti.
Essa è destinata ad essere utilizzata per la progettazione di edifici ed opere di ingegneria civile unitamente alla UNI EN 1993-1-1.

TESTO INGLESE

La presente norma è la versione ufficiale in lingua inglese della norma europea EN 1993-1-3 (edizione ottobre 2006) e tiene conto dell'errata corrige di novembre 2009 (AC:2009).

La presente norma è la revisione della UNI ENV 1993-1-3:2000.

ICS 91.010.30

UNI
Ente Nazionale Italiano di Unificazione
Via Sannio, 2
20137 Milano, Italia

© UNI
Riproduzione vietata. Tutti i diritti sono riservati. Nessuna parte del presente documento può essere riprodotta o diffusa con un mezzo qualsiasi, fotocopie, microfilm o altro, senza il consenso scritto dell'UNI.
www.uni.com

Documento contenuto nel prodotto EUROCODICI edizione 2011. E' vietato l'uso in rete del singolo documento e la sua riproduzione. E' autorizzata la stampa per uso interno.

PREMESSA NAZIONALE

La presente norma costituisce il recepimento, in lingua inglese, della norma europea EN 1993-1-3 (edizione ottobre 2006 + errata corrige AC:2009), che assume così lo status di norma nazionale italiana.

La presente norma è stata elaborata sotto la competenza della Commissione Tecnica UNI

Ingegneria strutturale

La presente norma è stata ratificata dal Presidente dell'UNI ed è entrata a far parte del corpo normativo nazionale il 18 gennaio 2007.

Le norme UNI sono elaborate cercando di tenere conto dei punti di vista di tutte le parti interessate e di conciliare ogni aspetto conflittuale, per rappresentare il reale stato dell'arte della materia ed il necessario grado di consenso.
Chiunque ritenesse, a seguito dell'applicazione di questa norma, di poter fornire suggerimenti per un suo miglioramento o per un suo adeguamento ad uno stato dell'arte in evoluzione è pregato di inviare i propri contributi all'UNI, Ente Nazionale Italiano di Unificazione, che li terrà in considerazione per l'eventuale revisione della norma stessa.

Le norme UNI sono revisionate, quando necessario, con la pubblicazione di nuove edizioni o di aggiornamenti.
È importante pertanto che gli utilizzatori delle stesse si accertino di essere in possesso dell'ultima edizione e degli eventuali aggiornamenti.
Si invitano inoltre gli utilizzatori a verificare l'esistenza di norme UNI corrispondenti alle norme EN o ISO ove citate nei riferimenti normativi.

Documento contenuto nel prodotto EUROCODICI edizione 2011. E' vietato l'uso in rete del singolo documento e la sua riproduzione. E' autorizzata la stampa per uso interno.

EUROPEAN STANDARD

NORME EUROPÉENNE

EUROPÄISCHE NORM

EN 1993-1-3:2006/AC

November 2009
Novembre 2009
November 2009

ICS 91.010.30

English version
Version Française
Deutsche Fassung

Eurocode 3 - Design of steel structures - Part 1-3: General rules - Supplementary rules for cold-formed members and sheeting

Eurocode 3 - Calcul des structures en acier - Partie 1-3: Règles générales - Règles supplémentaires pour les profilés et plaques formés à froid

Bemessung und Konstruktion von Stahlbauten - Teil 1-3: Allgemeine Regeln - Ergänzende Regeln für kaltgeformte dünnwandige Bauteile und Bleche

This corrigendum becomes effective on 11 November 2009 for incorporation in the three official language versions of the EN.

Ce corrigendum prendra effet le 11 novembre 2009 pour incorporation dans les trois versions linguistiques officielles de la EN.

Die Berichtigung tritt am 11.November 2009 zur Einarbeitung in die drei offiziellen Sprachfassungen der EN in Kraft.

EUROPEAN COMMITTEE FOR STANDARDIZATION
COMITÉ EUROPÉEN DE NORMALISATION
EUROPÄISCHES KOMITEE FÜR NORMUNG

Management Centre: Avenue Marnix 17, B-1000 Brussels

© 2009 CEN All rights of exploitation in any form and by any means reserved worldwide for CEN national Members.
Tous droits d'exploitation sous quelque forme et de quelque manière que ce soit réservés dans le monde entier aux membres nationaux du CEN.
Alle Rechte der Verwertung, gleich in welcher Form und in welchem Verfahren, sind weltweit den nationalen Mitgliedern von CEN vorbehalten.

Ref. No.:EN 1993-1-3:2006/AC:2009 D/E/F

Documento contenuto nel prodotto EUROCODICI edizione 2011. E' vietato l'uso in rete del singolo documento e la sua riproduzione. E' autorizzata la stampa per uso interno.

1) Modification to 1.1

Paragraph "(1)", *delete three times* "thin gauge".

2) Modification to 3.2.1

Paragraph "(1)", *replace* "tensile strength" *with* "ultimate tensile strength".

3) Modification to 3.2.4

Paragraph "(3)", *in Equation* "(3.3b)", *delete the second* "=" *sign.*

4) Modification to Clause 4

Paragraph "(1)", "**NOTE**", *replace* "EN 1090, 9.3.1" *with* "EN 1090-2, 9.3.1".

5) Modification to 5.5.2

Paragraph "(3)", *replace two times* "from tables 4.1 and 4.2" *with* "from tables 4.1 and 4.2 of EN 1993-1-5".

6) Modification to 5.5.3.2

Paragraph "(10)", *replace* "5.5.2(5)" *with* "5.5.2(1)".

7) Modification to 5.5.3.3

Paragraph "(9)", *replace* "5.5.2(5)" *with* "5.5.2(1)".

8) Modification to 5.5.3.4.4

Paragraph "(1)", *2nd line, replace* "interaction between the distortional buckling (flexural buckling of the flange stiffeners and the web stiffeners)" *with* "interaction between the flexural buckling of the flange stiffeners and the web stiffeners".

9) Modifications to 6.1.2

Paragraph "(1)", *replace* "see 3.2.3" *with* "see 3.2.2".

Paragraph "(2)", *replace* "EN 1993-1-8, 3.6.3" *with* "EN 1993-1-8, 3.10.3".

10) Modification to 6.1.3

Paragraph "(1)", *delete:*

" $\bar{\lambda}_{e\,max}$ is the relative slenderness of the element which corresponds to the largest value of $\bar{\lambda}_e / \bar{\lambda}_{e0}$;".

11) Modification to 6.1.4.1

Paragraph "(1)", *delete the 12th line:*

" For stiffened elements $\bar{\lambda}_e = \bar{\lambda}_d$ and $\bar{\lambda}_{e0} = 0,65$, see 5.5.3. "

Documento contenuto nel prodotto EUROCODICI edizione 2011. E' vietato l'uso in rete del singolo documento e la sua riproduzione. E' autorizzata la stampa per uso interno.

12) Modifications to 6.1.7.2

Paragraph "(4)", *under Equation* "(6.16d)", *Equations for* "k_7", "k_8" *and* "k_{10}", *replace:*

– "$k_7 = 1 + s_s / t / 750$" *with* "$k_7 = 1 + h_w /(t \times 750)$";

– "$k_8 = (1{,}10 - s_s / t / 665) / k$" *with* "$k_8 = (1{,}10 - h_w /(t \times 665)) / k$";

– *and* "$k_{10} = (0{,}98 - s_s / t / 865) / k$" *with* "$k_{10} = (0{,}98 - h_w /(t \times 865)) / k$".

13) Modification to 6.1.9

Paragraph "(3)", *replace* "$M_{cy,Rd,ten} \leq {}_{cy,Rd,com}$" *with* "$M_{cy,Rd,ten} \leq M_{cy,Rd,com}$".

14) Modifications to 6.2.3

Paragraph "(6)", *replace:*

"(6) For doubly symmetric cross-sections (e.g. $y_o = z_o = 0$), the elastic critical force $N_{cr,TF}$ for torsional-flexural buckling should be determined from:

$$N_{cr,TF} = N_{cr,T} \qquad \text{...(6.34)}$$

provided $N_{cr,T} < N_{cr,y}$ and $N_{cr,T} < N_{cr,z}$. "

with:

"(6) For doubly symmetric cross-sections (e.g. $y_o = z_o = 0$), the elastic critical force N_{cr} should be determined from:

$$N_{cr} = N_{cr,i} \qquad \text{...(6.34)}$$

where $N_{cr,i}$ should be determined as minimum from three values: $N_{cr,y}$, $N_{cr,z}$, $N_{cr,T}$."

Paragraph "(7)", *end of the paragraph, add the following text:*

"Equation (6.35) is valid only if the torsional and flexural buckling lengths are equal $l_y = l_T$."

15) Modification to 6.2.5

Paragraph "(2)", *1st line, replace* "(6.38)" *with* "(6.36)".

16) Modification to 8.2

Paragraph "(2)", *replace* "6.2.2.1(2)" *with* "6.2.2(1)".

17) Modifications to 8.3

Paragraph "(13)", "Table 8.2", "NOTE:*2)", *replace two times* "skrews" *with* "screws".

Paragraph "(13)", "Table 8.4", *8th row from the top, replace* "3 mm > $t \geq$ 0,75 mm" *with* "$0{,}75 \text{ mm} \leq t < 3 \text{ mm}$".

Documento contenuto nel prodotto EUROCODICI edizione 2011. E' vietato l'uso in rete del singolo documento e la sua riproduzione. E' autorizzata la stampa per uso interno.

18) Modification to 8.5.3

Paragraph "(5)", *list entry* "(i)", *replace two times* "$F_{w,Sd}$" *with* "$F_{w,Rd}$".

19) Modifications to 10.1.1

Paragraph "(5)", *correct* "trapetzoidal" *into* "trapezoidal".

Paragraph "(6)", *correct* "trapetzoidal" *into* "trapezoidal".

20) Modifications to 10.1.4.2

Paragraph "(7)", *2nd and 3rd lines, replace* "The formula (10.10a)" *with* "The formula (10.9)".

Paragraph "(7)", *4th line, replace* "10.1.4.2(5)" *with* "(5)".

21) Modifications to 10.1.6

Paragraph "(2)", "Table 10.5", *4th row* "C-beam, gravity loading", *second column* "Reaction force on bottom flange R_1", *replace* "$-(1-\varsigma)k_h q_{Ed} L/2$" *with* "$(1-\varsigma)k_h q_{Ed} L/2$".

Paragraph "(2)", "Table 10.5", *4th row* "C-beam, gravity loading", *third column* "Reaction force on top flange R_2", *replace* "$(1-\varsigma)k_h q_{Ed} L/2$" *with* "$-(1-\varsigma)k_h q_{Ed} L/2$".

Paragraph "(2)", "Table 10.5", *5th row* "C-beam, uplift loading", *second column* "Reaction force on bottom flange R_1", *replace* "$(1-\varsigma)k_h q_{Ed} L/2$" *with* "$-(1-\varsigma)k_h q_{Ed} L/2$".

Paragraph "(2)", "Table 10.5", *5th row* "C-beam, uplift loading", *third column* "Reaction force on top flange R_2", *replace* "$-(1-\varsigma)k_h q_{Ed} L/2$" *with* "$(1-\varsigma)k_h q_{Ed} L/2$".

Paragraph "(3)", *replace this paragraph with the following one:*

"(3) The factor ς may be taken as $\varsigma = 1 - \sqrt[3]{\kappa_R^2}$ where κ_R is the correction factor given in Table 10.1, and the factor ξ may be taken as ξ=1,5ς."

22) Modification to 10.2.1

Paragraph "(1)", *replace in the second sentence* "by attached profiled steel sheeting" *with* "by attached profiled steel sheeting or by steel purlin or by similar component".

23) Modifications to 10.4

Paragraph "(2)", *replace in the first sentence* "using 5.1" *with* "using 5".

Paragraph "(2)", *Equation* "(10.25)", *replace* "$t_{a,\mathrm{eff}} = 1{,}18\, t \left(1 - \frac{d}{0{,}9a}\right)$" *with:* "$t_{a,eff} = 1{,}18t(1-0{,}9\frac{d}{a})$".

Paragraph "(4)", *replace in the first sentence* "using 6.1.9" *with* "using 6.1.7".

24) Modification to A.4.1

Paragraph "(2)", *6th line, delete* "(rare)".

Documento contenuto nel prodotto EUROCODICI edizione 2011. E' vietato l'uso in rete del singolo documento e la sua riproduzione. E' autorizzata la stampa per uso interno.

25) Modifications to A.6.2

Paragraph "(5)"*, replace* "in which μ_R is the resistance adjustment coefficient" *with* "in which μ_R is the adjustment coefficient"*.*

Paragraph "(7)"*, add after the note as normal clause text:*

"For the adjustment of second moment of area, where linear behaviour is observed under the serviceability limit state loading, the exponents in the formula (A.9) should be taken as follows: α = 0,0 and β = 1,0."

26) Modifications to Annex E

Paragraph "(1)"*, replace* "the purlins are restraint... of table E.1 are met" *with* "the purlins are restrained ... of table 10.3 are met"*.*

Paragraph "(3)"*,* "**NOTE**"*, replace reference to* "1.6.4" *with* "1.5.4"*.*

Documento contenuto nel prodotto EUROCODICI edizione 2011. E' vietato l'uso in rete del singolo documento e la sua riproduzione. E' autorizzata la stampa per uso interno.

Documento contenuto nel prodotto EUROCODICI edizione 2011. E' vietato l'uso in rete del singolo documento e la sua riproduzione. E' autorizzata la stampa per uso interno.

EUROPEAN STANDARD

NORME EUROPÉENNE

EUROPÄISCHE NORM

EN 1993-1-3

October 2006

ICS 91.010.30

Supersedes ENV 1993-1-3:1996

English Version

Eurocode 3 - Design of steel structures - Part 1-3: General rules - Supplementary rules for cold-formed members and sheeting

Eurocode 3 - Calcul des structures en acier - Partie 1-3: Règles générales - Règles supplémentarires pour les profilés et plaques à parois minces formés à froid

Eurocode 3 - Bemessung und Konstruktion von Stahlbauten - Teil 1-3: Allgemeine Regeln - Ergänzende Regeln für kaltgeformte dünnwandige Bauteile und Bleche

This European Standard was approved by CEN on 16 January 2006.

CEN members are bound to comply with the CEN/CENELEC Internal Regulations which stipulate the conditions for giving this European Standard the status of a national standard without any alteration. Up-to-date lists and bibliographical references concerning such national standards may be obtained on application to the Central Secretariat or to any CEN member.

This European Standard exists in three official versions (English, French, German). A version in any other language made by translation under the responsibility of a CEN member into its own language and notified to the Central Secretariat has the same status as the official versions.

CEN members are the national standards bodies of Austria, Belgium, Cyprus, Czech Republic, Denmark, Estonia, Finland, France, Germany, Greece, Hungary, Iceland, Ireland, Italy, Latvia, Lithuania, Luxembourg, Malta, Netherlands, Norway, Poland, Portugal, Romania, Slovakia, Slovenia, Spain, Sweden, Switzerland and United Kingdom.

EUROPEAN COMMITTEE FOR STANDARDIZATION
COMITÉ EUROPÉEN DE NORMALISATION
EUROPÄISCHES KOMITEE FÜR NORMUNG

Management Centre: rue de Stassart, 36 B-1050 Brussels

© 2006 CEN All rights of exploitation in any form and by any means reserved worldwide for CEN national Members.

Ref. No. EN 1993-1-3:2006: E

Documento contenuto nel prodotto EUROCODICI edizione 2011. E' vietato l'uso in rete del singolo documento e la sua riproduzione. E' autorizzata la stampa per uso interno.

Content

1 Introduction **5**
1.1 Scope 5
1.2 Normative references 5
1.3 Terms and definitions 6
1.4 Symbols 7
1.5 Terminology and conventions for dimensions 8

2 Basis of design **11**

3 Materials **12**
3.1 General 12
3.2 Structural steel 15
3.3 Connecting devices 17

4 Durability **17**

5 Structural analysis **18**
5.1 Influence of rounded corners 18
5.2 Geometrical proportions 20
5.3 Structural modelling for analysis 22
5.4 Flange curling 22
5.5 Local and distortional buckling 23
5.6 Plate buckling between fasteners 41

6 Ultimate limit states **41**
6.1 Resistance of cross-sections 41
6.2 Buckling resistance 56
6.3 Bending and axial tension 60

7 Serviceability limit states **60**
7.1 General 60
7.2 Plastic deformation 60
7.3 Deflections 60

8 Design of joints **61**
8.1 General 61
8.2 Splices and end connections of members subject to compression 61
8.3 Connections with mechanical fasteners 61
8.4 Spot welds 68
8.5 Lap welds 69

9 Design assisted by testing **73**

10 Special considerations for purlins, liner trays and sheetings **74**
10.1 Beams restrained by sheeting 74
10.2 Liner trays restrained by sheeting 92
10.3 Stressed skin design 95
10.4 Perforated sheeting 99

Annex A [normative] – Testing procedures **100**
A.1 General 100
A.2 Tests on profiled sheets and liner trays 100
A.3 Tests on cold-formed members 105
A.4 Tests on structures and portions of structures 108
A.5 Tests on torsionally restrained beams 110
A.6 Evaluation of test results 114

Documento contenuto nel prodotto EUROCODICI edizione 2011. E' vietato l'uso in rete del singolo documento e la sua riproduzione. E' autorizzata la stampa per uso interno.

Annex B [informative] – Durability of fasteners **119**

Annex C [informative] – Cross section constants for thin-walled cross sections **121**

C.1 Open cross sections 121
C.2 Cross section constants for open cross section with branches 123
C.3 Torsion constant and shear centre of cross section with closed part 124

Annex D [informative] – Mixed effective width/effective thickness method for outstand elements **125**

Annex E [Informative] – Simplified design for purlins **127**

Documento contenuto nel prodotto EUROCODICI edizione 2011. E' vietato l'uso in rete del singolo documento e la sua riproduzione. E' autorizzata la stampa per uso interno.

Foreword

This European Standard EN 1993-1-3, Eurocode 3: Design of steel structures: Part 1-3 General rules – Supplementary rules for cold formed members and sheeting, has been prepared by Technical Committee CEN/TC250 « Structural Eurocodes », the Secretariat of which is held by BSI. CEN/TC250 is responsible for all Structural Eurocodes.

This European Standard shall be given the status of a National Standard, either by publication of an identical text or by endorsement, at the latest by April 2007, and conflicting National Standards shall be withdrawn at latest by March 2010.

This Eurocode supersedes ENV 1993-1-3.

According to the CEN-CENELEC Internal Regulations, the National Standard Organizations of the following countries are bound to implement this European Standard: Austria, Belgium, Cyprus, Czech Republic, Denmark, Estonia, Finland, France, Germany, Greece, Hungary, Iceland, Ireland, Italy, Latvia, Lithuania, Luxembourg, Malta, Netherlands, Norway, Poland, Portugal, Romania, Slovakia, Slovenia, Spain, Sweden, Switzerland and United Kingdom.

National annex for EN 1993-1-3

This standard gives alternative procedures, values and recommendations for classes with notes indicating where national choices may have to be made. Therefore the National Standard implementing EN 1993-1-3 should have a National Annex containing all Nationally Determined Parameters to be used for the design of steel structures to be constructed in the relevant country.

National choice is allowed in EN 1993-1-3 through clauses:

- 2(3)P
- 2(5)
- 3.1(3) Note 1 and Note 2
- 3.2.4(1)
- 5.3(4)
- 8.3(5)
- 8.3(13), Table 8.1
- 8.3(13), Table 8.2
- 8.3(13), Table 8.3
- 8.3(13), Table 8.4
- 8.4(5)
- 8.5.1(4)
- 9(2)
- 10.1.1(1)
- 10.1.4.2(1)
- A.1(1), NOTE 2
- A.1(1), NOTE 3
- A.6.4(4)
- E(1)

Documento contenuto nel prodotto EUROCODICI edizione 2011. E' vietato l'uso in rete del singolo documento e la sua riproduzione. E' autorizzata la stampa per uso interno.

1 Introduction

1.1 Scope

(1) EN 1993-1-3 gives design requirements for cold-formed thin gauge members and sheeting. It applies to cold-formed steel products made from coated or uncoated thin gauge hot or cold rolled sheet or strip, that have been cold-formed by such processes as cold-rolled forming or press-braking. It may also be used for the design of profiled steel sheeting for composite steel and concrete slabs at the construction stage, see EN 1994. The execution of steel structures made of cold-formed thin gauge members and sheeting is covered in EN 1090.

NOTE: The rules in this part complement the rules in other parts of EN 1993-1.

(2) Methods are also given for stressed-skin design using steel sheeting as a structural diaphragm.

(3) This part does not apply to cold-formed circular and rectangular structural hollow sections supplied to EN 10219, for which reference should be made to EN 1993-1-1 and EN 1993-1-8.

(4) EN 1993-1-3 gives methods for design by calculation and for design assisted by testing. The methods for design by calculation apply only within stated ranges of material properties and geometrical proportions for which sufficient experience and test evidence is available. These limitations do not apply to design assisted by testing.

(5) EN 1993-1-3 does not cover load arrangement for testing for loads during execution and maintenance.

(6) The calculation rules given in this standard are only valid if the tolerances of the cold formed members comply with EN 1090-2

1.2 Normative references

The following normative documents contain provisions which, through reference in this text, constitute provisions of this European Standard. For dated references, subsequent amendments to, or revisions of, any of these publications do not apply.

However, parties to agreements based on this European Standard are encouraged to investigate the possibility of applying the most recent editions of the normative documents indicated below. For undated references, the latest edition of the normative document referred to applies.

EN 1993 *Eurocode 3 – Design of steel structures*

Part 1-1 to part 1-12

EN 10002 *Metallic materials - Tensile testing:*

Part 1: *Method of test (at ambient temperature)*;

EN 10025-1 *Hot-rolled products of structural steels - Part 1: General delivery conditions;*

EN 10025-2 *Hot-rolled products of structural steels - Part 2: Technical delivery conditions for non-alloy structural steels;*

EN 10025-3 *Hot-rolled products of structural steels - Part 3: Technical delivery conditions for normalized / normalized rolled weldable fine grain structural steels;*

EN 10025-4 *Hot-rolled products of structural steels - Part 4: Technical delivery conditions for thermomechanical rolled weldable fine grain structural steels;*

EN 10025-5 *Hot-rolled products of structural steels - Part 5: Technical delivery conditions for structural steels with improved atmospheric corrosion resistance;*

EN 10143 *Continuously hot-dip metal coated steel sheet and strip - Tolerances on dimensions and shape*;

EN 10149 *Hot rolled flat products made of high yield strength steels for cold-forming:*

Part 2: *Delivery conditions for normalized/normalized rolled steels*;

Part 3: *Delivery conditions for thermomechanical rolled steels*;

EN 10204 *Metallic products. Types of inspection documents (includes amendment A 1:1995);*

EN 10268 *Cold-rolled flat products made of high yield strength micro-alloyed steels for cold forming - General delivery conditions;*

Documento contenuto nel prodotto EUROCODICI edizione 2011. E' vietato l'uso in rete del singolo documento e la sua riproduzione. E' autorizzata la stampa per uso interno.

EN 10292 *Continuously hot-dip coated strip and sheet of steels with higher yield strength for cold forming - Technical delivery conditions;*

EN 10326 *Continuously hot-dip coated strip and sheet of structural steels - Technical delivery conditions;*

EN 10327 *Continuously hot-dip coated strip and sheet of low carbon steels for cold forming - Technical delivery conditions;*

EN-ISO 12944-2 *Paints and vanishes. Corrosion protection of steel structures by protective paint systems. Part 2: Classification of environments (ISO 12944-2:1998);*

EN 1090-2 *Execution of steel structures and aluminium structures Part 2: Technical requirements for steel structures:*

EN 1994 *Eurocode 4: Design of composite steel and concrete structures;*

EN ISO 1478 *Tapping screws thread;*

EN ISO 1479 *Hexagon head tapping screws;*

EN ISO 2702 *Heat-treated steel tapping screws - Mechanical properties;*

EN ISO 7049 *Cross recessed pan head tapping screws;*

EN ISO 10684 *Fasteners – hot deep galvanized coatings*

ISO 4997 *Cold reduced steel sheet of structural quality*;

EN 508-1 *Roofing products from metal sheet - Specification for self-supporting products of steel, aluminium or stainless steel sheet - Part 1: Steel;*

FEM 10.2.02 *Federation Europeenne de la manutention, Secion X, Equipment et proceedes de stockage, FEM 10.2.02, The design of static steel pallet racking, Racking design code, April 2001 Version 1.02.*

1.3 Terms and definitions

Supplementary to EN 1993-1-1, for the purposes of this Part 1-3 of EN 1993, the following terms and definitions apply:

1.3.1
basic material
The flat sheet steel material out of which cold-formed sections and profiled sheets are made by cold-forming.

1.3.2
basic yield strength
The tensile yield strength of the basic material.

1.3.3
diaphragm action
Structural behaviour involving in-plane shear in the sheeting.

1.3.4
liner tray
Profiled sheet with large lipped edge stiffeners, suitable for interlocking with adjacent liner trays to form a plane of ribbed sheeting that is capable of supporting a parallel plane of profiled sheeting spanning perpendicular to the span of the liner trays.

1.3.5
partial restraint
Restriction of the lateral or rotational movement, or the torsional or warping deformation, of a member or element, that increases its buckling resistance in a similar way to a spring support, but to a lesser extent than a rigid support.

Documento contenuto nel prodotto EUROCODICI edizione 2011. E' vietato l'uso in rete del singolo documento e la sua riproduzione. E' autorizzata la stampa per uso interno.

1.3.6
relative slenderness
A normalized non-dimensional slenderness ratio.

1.3.7
restraint
Restriction of the lateral or rotational movement, or the torsional or warping deformation, of a member or element, that increases its buckling resistance to the same extent as a rigid support.

1.3.8
stressed-skin design
A design method that allows for the contribution made by diaphragm action in the sheeting to the stiffness and strength of a structure.

1.3.9
support
A location at which a member is able to transfer forces or moments to a foundation, or to another member or other structural component.

1.3.10
nominal thickness
A target average thickness inclusive zinc and other metallic coating layers when present rolled and defined by the steel supplier (t_{nom} not including organic coatings).

1.3.11
steel core thickness
A nominal thickness minus zinc and other metallic coating layers (t_{cor}).

1.3.12
design thickness
the steel core thickness used in design by calculation according to 1.5.3(6) and 3.2.4.

1.4 Symbols

(1) In addition to those given in EN 1993-1-1, the following main symbols are used:

f_y yield strength

f_{ya} average yield strength

f_{yb} basic yield strength

t design core thickness of steel material before cold forming, exclusive of metal and organic coating

t_{nom} nominal sheet thickness after cold forming inclusive of zinc and other metallic coating not including organic coating

t_{cor} the nominal thickness minus zinc and other metallic coating

K spring stiffness for displacement

C spring stiffness for rotation

(2) Additional symbols are defined where they first occur.

(3) A symbol may have several meanings in this part.

Documento contenuto nel prodotto EUROCODICI edizione 2011. E' vietato l'uso in rete del singolo documento e la sua riproduzione. E' autorizzata la stampa per uso interno.

1.5 Terminology and conventions for dimensions

1.5.1 Form of sections

(1) Cold-formed members and profiled sheets have within the permitted tolerances a constant nominal thickness over their entire length and may have either a uniform cross section or a tapering cross section along their length.

(2) The cross-sections of cold-formed members and profiled sheets essentially comprise a number of plane elements joined by curved elements.

(3) Typical forms of sections for cold-formed members are shown in figure 1.1.

NOTE: The calculation methods of this Part 1-3 of EN 1993 does not cover all the cases shown in figures 1.1-1.2.

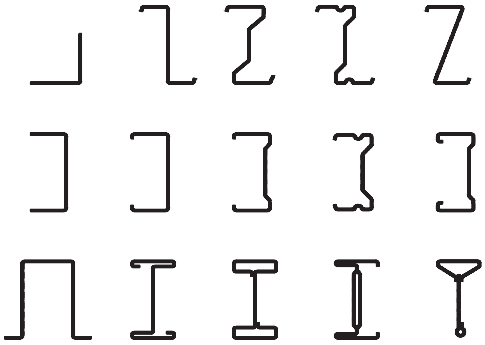

a) Single open sections

b) Open built-up sections

c) Closed built-up sections

Figure 1.1: Typical forms of sections for cold-formed members

(4) Examples of cross-sections for cold-formed members and sheets are illustrated in figure 1.2.

NOTE: All rules in this Part 1-3 of EN 1993 relate to the main axis properties, which are defined by the main axes y - y and z - z for symmetrical sections and u - u and v - v for unsymmetrical sections as e.g. angles and Zed-sections. In some cases the bending axis is imposed by connected structural elements whether the cross-section is symmetric or not.

Documento contenuto nel prodotto EUROCODICI edizione 2011. E' vietato l'uso in rete del singolo documento e la sua riproduzione. E' autorizzata la stampa per uso interno.

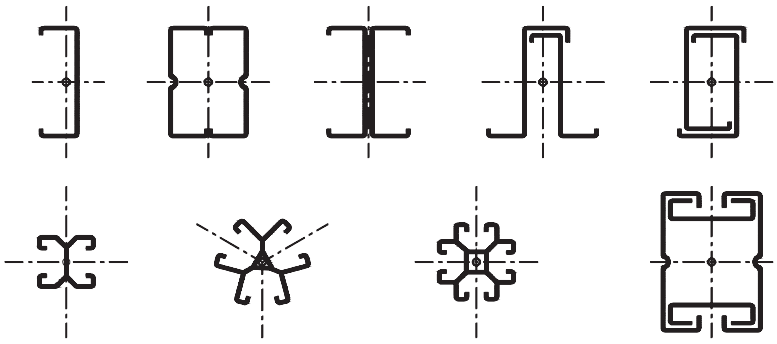

a) Compression members and tension members

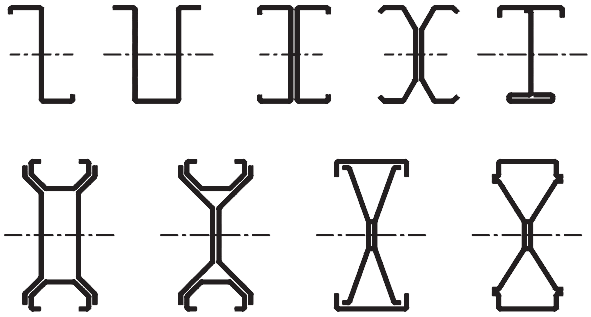

b) Beams and other members subject to bending

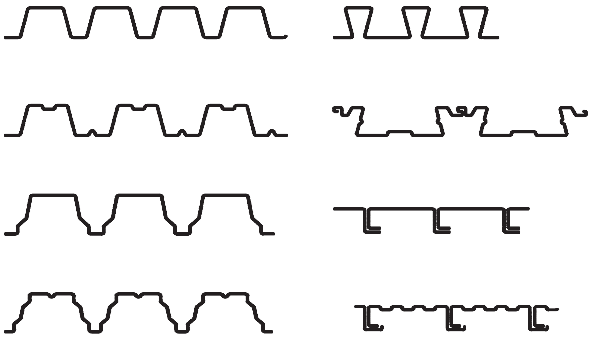

c) Profiled sheets and liner trays

Figure 1.2: Examples of cold-formed members and profiled sheets

(5) Cross-sections of cold-formed members and sheets may either be unstiffened or incorporate longitudinal stiffeners in their webs or flanges, or in both.

1.5.2 Form of stiffeners

(1) Typical forms of stiffeners for cold-formed members and sheets are shown in figure 1.3.

Documento contenuto nel prodotto EUROCODICI edizione 2011. E' vietato l'uso in rete del singolo documento e la sua riproduzione. E' autorizzata la stampa per uso interno.

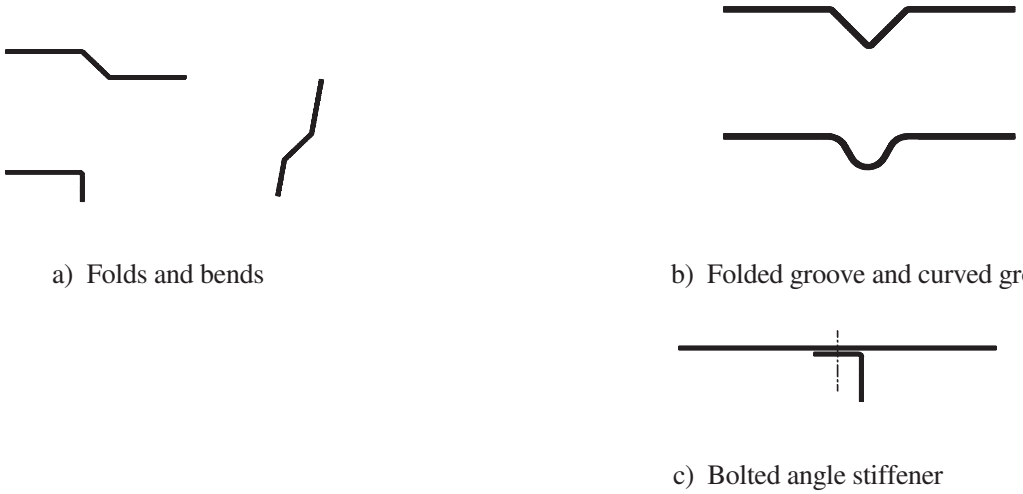

Figure 1.3: Typical forms of stiffeners for cold-formed members and sheeting

(2) Longitudinal flange stiffeners may be either edge stiffeners or intermediate stiffeners.

(3) Typical edge stiffeners are shown in figure 1.4.

Figure 1.4: Typical edge stiffeners

(4) Typical intermediate longitudinal stiffeners are illustrated in figure 1.5.

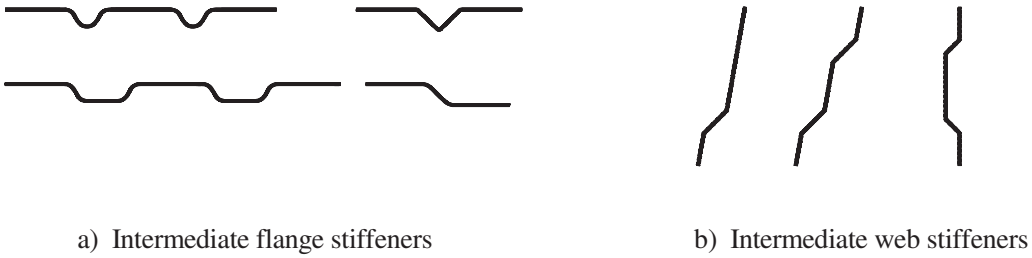

Figure 1.5: Typical intermediate longitudinal stiffeners

1.5.3 Cross-section dimensions

(1) Overall dimensions of cold-formed members and sheeting, including overall width b, overall height h, internal bend radius r and other external dimensions denoted by symbols without subscripts, such as a, c or d, are measured to the face of the material, unless stated otherwise, as illustrated in figure 1.6.

Documento contenuto nel prodotto EUROCODICI edizione 2011. E' vietato l'uso in rete del singolo documento e la sua riproduzione. E' autorizzata la stampa per uso interno.

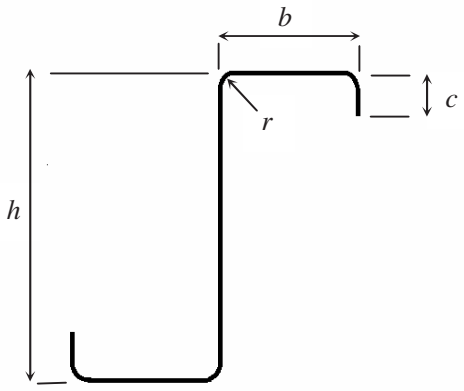

Figure 1.6: Dimensions of typical cross-section

(2) Unless stated otherwise, the other cross-sectional dimensions of cold-formed members and sheeting, denoted by symbols with subscripts, such as b_d, h_w or s_w, are measured either to the midline of the material or the midpoint of the corner.

(3) In the case of sloping elements, such as webs of trapezoidal profiled sheets, the slant height s is measured parallel to the slope. The slope is straight line between intersection points of flanges and web.

(4) The developed height of a web is measured along its midline, including any web stiffeners.

(5) The developed width of a flange is measured along its midline, including any intermediate stiffeners.

(6) The thickness t is a steel design thickness (the steel core thickness extracted minus tolerance if needed as specified in clause 3.2.4), if not otherwise stated.

1.5.4 Convention for member axes

(1) In general the conventions for members is as used in Part 1-1 of EN 1993, see Figure 1.7.

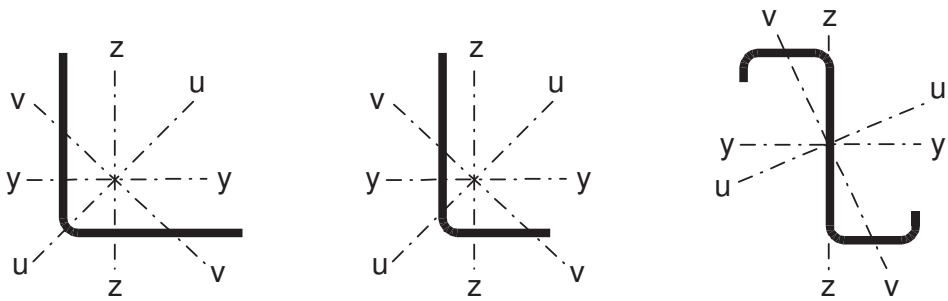

Figure 1.7: Axis convention

(2) For profiled sheets and liner trays the following axis convention is used:

- y - y axis parallel to the plane of sheeting;
- z - z axis perpendicular to the plane of sheeting.

2 Basis of design

(1) The design of cold formed members and sheeting should be in accordance with the general rules given in EN 1990 and EN 1993-1-1. For a general approach with FE-methods (or others) see EN 1993-1-5, Annex C.

(2)P Appropriate partial factors shall be adopted for ultimate limit states and serviceability limit states.

Documento contenuto nel prodotto EUROCODICI edizione 2011. E' vietato l'uso in rete del singolo documento e la sua riproduzione. E' autorizzata la stampa per uso interno.

(3)P For verifications by calculation at ultimate limit states the partial factor γ_M shall be taken as follows:

- resistance of cross-sections to excessive yielding including local and distortional buckling: γ_{M0}
- resistance of members and sheeting where failure is caused by global buckling: γ_{M1}
- resistance of net sections at fastener holes: γ_{M2}

NOTE: Numerical values for γ_{Mi} may be defined in the National Annex. The following numerical values are recommended for the use in buildings:

$\gamma_{M0} = 1{,}00$;

$\gamma_{M1} = 1{,}00$;

$\gamma_{M2} = 1{,}25$.

(4) For values of γ_M for resistance of connections, see Section 8.

(5) For verifications at serviceability limit states the partial factor $\gamma_{M,ser}$ should be used.

NOTE: Numerical value for $\gamma_{M,ser}$ may be defined in the National Annex. The following numerical value is recommended for the use in buildings:

$\gamma_{M,ser} = 1{,}00$.

(6) For the design of structures made of cold formed members and sheeting a distinction should be made between "structural classes" associated with failure consequences according to EN 1990 – Annex B defined as follows:

Structural Class I: Construction where cold-formed members and sheeting are designed to contribute to the overall strength and stability of a structure;

Structural Class II: Construction where cold-formed members and sheeting are designed to contribute to the strength and stability of individual structural elements;

Structural Class III: Construction where cold-formed sheeting is used as an element that only transfers loads to the structure.

NOTE 1: During different construction stages different structural classes may be considered.
NOTE 2: For requirements for execution of sheeting see EN 1090.

3 Materials

3.1 General

(1) All steels used for cold-formed members and profiled sheets should be suitable for cold-forming and welding, if needed. Steels used for members and sheets to be galvanized should also be suitable for galvanizing.

(2) The nominal values of material properties given in this Section should be adopted as characteristic values in design calculations.

(3) This part of EN 1993 covers the design of cold formed members and profiles sheets fabricated from steel material conforming to the steel grades listed in table 3.1a.

Documento contenuto nel prodotto EUROCODICI edizione 2011. E' vietato l'uso in rete del singolo documento e la sua riproduzione. E' autorizzata la stampa per uso interno.

Table 3.1a: Nominal values of basic yield strength f_{yb} and ultimate tensile strength f_u

Type of steel	Standard	Grade	f_{yb} N/mm^2	f_u N/mm^2
Hot rolled products of non-alloy structural steels. Part 2: Technical delivery conditions for non alloy structural steels	EN 10025: Part 2	S 235	235	360
		S 275	275	430
		S 355	355	510
Hot-rolled products of structural steels. Part 3: Technical delivery conditions for normalized/normalized rolled weldable fine grain structural steels	EN 10025: Part 3	S 275 N	275	370
		S 355 N	355	470
		S 420 N	420	520
		S 460 N	460	550
		S 275 NL	275	370
		S 355 NL	355	470
		S 420 NL	420	520
		S 460 NL	460	550
Hot-rolled products of structural steels. Part 4: Technical delivery conditions for thermomechanical rolled weldable fine grain structural steels	EN 10025: Part 4	S 275 M	275	360
		S 355 M	355	450
		S 420 M	420	500
		S 460 M	460	530
		S 275 ML	275	360
		S 355 ML	355	450
		S 420 ML	420	500
		S 460 ML	460	530

NOTE 1: For steel strip less than 3 mm thick conforming to EN 10025, if the width of the original strip is greater than or equal to 600 mm, the characteristic values may be given in the National Annex. Values equal to 0,9 times those given in Table 3.1a are recommended.

NOTE 2: For other steel materials and products see the National Annex. Examples for steel grades that may conform to the requirements of this standard are given in Table 3.1b.

Documento contenuto nel prodotto EUROCODICI edizione 2011. E' vietato l'uso in rete del singolo documento e la sua riproduzione. E' autorizzata la stampa per uso interno.

Table 3.1b: Nominal values of basic yield strength f_{yb} and ultimate tensile strength f_u

Type of steel	Standard	Grade	f_{yb} N/mm^2	f_u N/mm^2
Cold reduced steel sheet of structural quality	ISO 4997	CR 220	220	300
		CR 250	250	330
		CR 320	320	400
Continuous hot dip zinc coated carbon steel sheet of structural quality	EN 10326	S220GD+Z	220	300
		S250GD+Z	250	330
		S280GD+Z	280	360
		S320GD+Z	320	390
		S350GD+Z	350	420
Hot-rolled flat products made of high yield strength steels for cold forming. Part 2: Delivery conditions for thermomechanically rolled steels	EN 10149: Part 2	S 315 MC	315	390
		S 355 MC	355	430
		S 420 MC	420	480
		S 460 MC	460	520
		S 500 MC	500	550
		S 550 MC	550	600
		S 600 MC	600	650
		S 650 MC	650	700
		S 700 MC	700	750
	EN 10149: Part 3	S 260 NC	260	370
		S 315 NC	315	430
		S 355 NC	355	470
		S 420 NC	420	530
Cold-rolled flat products made of high yield strength micro-alloyed steels for cold forming	EN 10268	H240LA	240	340
		H280LA	280	370
		H320LA	320	400
		H360LA	360	430
		H400LA	400	460
Continuously hot-dip coated strip and sheet of steels with higher yield strength for cold forming	EN 10292	H260LAD	240 2)	340 2)
		H300LAD	280 2)	370 2)
		H340LAD	320 2)	400 2)
		H380LAD	360 2)	430 2)
		H420LAD	400 2)	460 2)
Continuously hot-dipped zinc-aluminium (ZA) coated steel strip and sheet	EN 10326	S220GD+ZA	220	300
		S250GD+ZA	250	330
		S280GD+ZA	280	360
		S320GD+ZA	320	390
		S350GD+ZA	350	420
Continuously hot-dipped aluminium-zinc (AZ) coated steel strip and sheet	EN 10326	S220GD+AZ	220	300
		S250GD+AZ	250	330
		S280GD+AZ	280	360
		S320GD+AZ	320	390
		S350GD+AZ	350	420
Continuously hot-dipped zinc coated strip and sheet of mild steel for cold forming	EN 10327	DX51D+Z	140 1)	270 1)
		DX52D+Z	140 1)	270 1)
		DX53D+Z	140 1)	270 1)

1) Minimum values of the yield strength and ultimate tensile strength are not given in the standard. For all steel grades a minimum value of 140 N/mm^2 for yield strength and 270 N/mm^2 for ultimate tensile strength may be assumed.

2) The yield strength values given in the names of the materials correspond to transversal tension. The values for longitudinal tension are given in the table.

Documento contenuto nel prodotto EUROCODICI edizione 2011. E' vietato l'uso in rete del singolo documento e la sua riproduzione. E' autorizzata la stampa per uso interno.

3.2 Structural steel

3.2.1 Material properties of base material

(1) The nominal values of yield strength f_{yb} or tensile strength f_u should be obtained

a) either by adopting the values $f_y = R_{eh}$ or $R_{p0,2}$ and $f_u = R_m$ direct from product standards, or

b) by using the values given in Table 3.1a and b

c) by appropriate tests.

(2) Where the characteristic values are determined from tests, such tests should be carried out in accordance with EN 10002-1. The number of test coupons should be at least 5 and should be taken from a lot in following way:

1. Coils: a. For a lot from one production (one pot of melted steel) at least one coupon per coil of 30% of the number of coils;

   b. For a lot from different productions at least one coupon per coil;

2. Strips: At least one coupon per 2000 kg from one production.

The coupons should be taken at random from the concerned lot of steel and the orientation should be in the length of the structural element. The characteristic values should be determined on basis of a statistical evaluation in accordance with EN 1990 Annex D.

(3) It may be assumed that the properties of steel in compression are the same as those in tension.

(4) The ductility requirements should comply with 3.2.2 of EN 1993-1-1.

(5) The design values for material coefficients should be taken as given in 3.2.6 of EN 1993-1-1

(6) The material properties for elevated temperatures are given in EN 1993-1-2.

3.2.2 Material properties of cold formed sections and sheeting

(1) Where the yield strength is specified using the symbol f_y the average yield strength f_{ya} may be used if (4) to (8) apply. In other cases the basic yield strength f_{yb} should be used. Where the yield strength is specified using the symbol f_{yb} the basic yield strength f_{yb} should be used.

(2) The average yield strength f_{ya} of a cross-section due to cold working may be determined from the results of full size tests.

(3) Alternatively the increased average yield strength f_{ya} may be determined by calculation using:

$$f_{ya} = f_{yb} + \left(f_u - f_{yb}\right)\frac{knt^2}{A_g} \qquad \text{but} \qquad f_{ya} \le \frac{\left(f_u + f_{yb}\right)}{2} \qquad \ldots (3.1)$$

where:

A_g is the gross cross-sectional area;

k is a numerical coefficient that depends on the type of forming as follows:

- $k = 7$ for roll forming;
- $k = 5$ for other methods of forming;

n is the number of 90° bends in the cross-section with an internal radius $r \le 5t$ (fractions of 90° bends should be counted as fractions of n);

t is the design core thickness of the steel material before cold-forming, exclusive of metal and organic coatings, see 3.2.4.

(4) The increased yield strength due to cold forming may be taken into account as follows:

Documento contenuto nel prodotto EUROCODICI edizione 2011. E' vietato l'uso in rete del singolo documento e la sua riproduzione. E' autorizzata la stampa per uso interno.

- in axially loaded members in which the effective cross-sectional area A_{eff} equals the gross area A_g;
- in determining A_{eff} the yield strength f_y should be taken as f_{yb}.

(5) The average yield strength f_{ya} may be utilised in determining:

- the cross-section resistance of an axially loaded tension member;
- the cross-section resistance and the buckling resistance of an axially loaded compression member with a fully effective cross-section;
- the moment resistance of a cross-section with fully effective flanges.

(6) To determine the moment resistance of a cross-section with fully effective flanges, the cross-section may be subdivided into m nominal plane elements, such as flanges. Expression (3.1) may then be used to obtain values of increased yield strength $f_{y,i}$ separately for each nominal plane element i, provided that:

$$\frac{\sum_{i=1}^{m} A_{g,i} f_{y,i}}{\sum_{i=1}^{m} A_{g,i}} \leq f_{ya} \qquad \ldots (3.2)$$

where:

$A_{g,i}$ is the gross cross-sectional area of nominal plane element i,

and when calculating the increased yield strength $f_{y,i}$ using the expression (3.1) the bends on the edge of the nominal plane elements should be counted with the half their angle for each area $A_{g,i}$.

(7) The increase in yield strength due to cold forming should not be utilised for members that are subjected to heat treatment after forming at more than 580°C for more than one hour.

NOTE: For further information see EN 1090, Part 2.

(8) Special attention should be paid to the fact that some heat treatments (especially annealing) might induce a reduced yield strength lower than the basic yield strength f_{yb}.

NOTE: For welding in cold formed areas see also EN 1993-1-8.

3.2.3 Fracture toughness

(1) See EN 1993-1-1 and EN 1993-1-10.

3.2.4 Thickness and thickness tolerances

(1) The provisions for design by calculation given in this Part 1-3 of EN 1993 may be used for steel within given ranges of core thickness t_{cor}.

NOTE: The ranges of core thickness t_{cor} for sheeting and members may be given in the National Annex. The following values are recommended:

- for sheeting and members: $0{,}45 \text{ mm} \leq t_{cor} \leq 15 \text{ mm}$
- for connections: $0{,}45 \text{ mm} \leq t_{cor} \leq 4 \text{ mm}$, see 8.1(2)

(2) Thicker or thinner material may also be used, provided that the load bearing resistance is determined by design assisted by testing.

Documento contenuto nel prodotto EUROCODICI edizione 2011. E' vietato l'uso in rete del singolo documento e la sua riproduzione. E' autorizzata la stampa per uso interno.

(3) The steel core thickness t_{cor} should be used as design thickness, where

$$t = t_{cor} \quad \text{if } tol \leq 5\% \qquad \ldots (3.3a)$$

$$t = t_{cor} = \frac{100 - tol}{95} \quad \text{if } tol > 5\% \qquad \ldots (3.3b)$$

with $t_{cor} = t_{nom} - t_{metallic\ coatings}$ … (3.3c)

where tol is the minus tolerance in %.

NOTE: For the usual Z 275 zinc coating, t_{zinc} = 0,04 mm.

(4) For continuously hot-dip metal coated members and sheeting supplied with negative tolerances less or equal to the "special tolerances (*S*)" given in EN 10143, the design thickness according to (3.3a) may be used. If the negative tolerance is beyond "special tolerance (*S*)" given in EN 10143 then the design thickness according to (3.3b) may be used.

(5) t_{nom} is the nominal sheet thickness after cold forming. It may be taken as the value to t_{nom} of the original sheet, if the calculative cross-sectional areas before and after cold forming do not differ more than 2%; otherwise the notional dimensions should be changed.

3.3 Connecting devices

3.3.1 Bolt assemblies

(1) Bolts, nuts and washers should conform to the requirements given in EN 1993-1-8.

3.3.2 Other types of mechanical fastener

(1) Other types of mechanical fasteners as:

- self-tapping screws as thread forming self-tapping screws, thread cutting self-tapping screws or self-drilling self-tapping screws,
- cartridge-fired pins,
- blind rivets

may be used where they comply with the relevant European Product Specification.

(2) The characteristic shear resistance $F_{v,Rk}$ and the characteristic minimum tension resistance $F_{t,Rk}$ of the mechanical fasteners may be taken from the EN Product Standard or ETAG or ETA.

3.3.3 Welding consumables

(1) Welding consumables should conform to the requirements given in EN 1993-1-8.

4 Durability

(1) For basic requirements see section 4 of EN 1993-1-1.

NOTE: EN 1090, 9.3.1 lists the factors affecting execution that need to be specified during design.

(2) Special attention should be given to cases in which different materials are intended to act compositely, if these materials are such that electrochemical phenomena might produce conditions leading to corrosion.

NOTE 1: For corrosion resistance of fasteners for the environmental class following EN-ISO 12944-2 see Annex B.

NOTE 2: For roofing products see EN 508-1.

NOTE 3: For other products see Part 1-1 of EN 1993.

NOTE 4: For hot dip galvanized fasteners see EN ISO 10684.

Documento contenuto nel prodotto EUROCODICI edizione 2011. E' vietato l'uso in rete del singolo documento e la sua riproduzione. E' autorizzata la stampa per uso interno.

5 Structural analysis

5.1 Influence of rounded corners

(1) In cross-sections with rounded corners, the notional flat widths b_p of the plane elements should be measured from the midpoints of the adjacent corner elements as indicated in figure 5.1.

(2) In cross-sections with rounded corners, the calculation of section properties should be based upon the nominal geometry of the cross-section.

(3) Unless more appropriate methods are used to determine the section properties the following approximate procedure may be used. The influence of rounded corners on cross-section resistance may be neglected if the internal radius $r \leq 5\,t$ and $r \leq 0{,}10\,b_p$ and the cross-section may be assumed to consist of plane elements with sharp corners (according to figure 5.2, note b_p for all flat plane elements, inclusive plane elements in tension). For cross-section stiffness properties the influence of rounded corners should always be taken into account.

Documento contenuto nel prodotto EUROCODICI edizione 2011. E' vietato l'uso in rete del singolo documento e la sua riproduzione. E' autorizzata la stampa per uso interno.

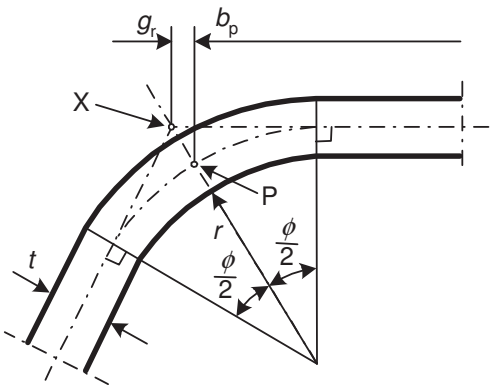

(a) midpoint of corner or bend

X is intersection of midlines

P is midpoint of corner

$r_m = r + t/2$

$g_r = r_m\left(\tan(\frac{\phi}{2}) - \sin(\frac{\phi}{2})\right)$

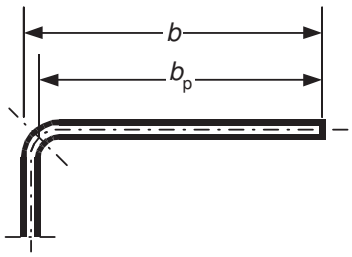

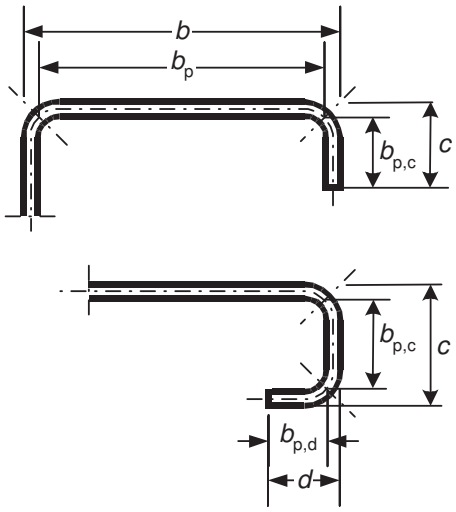

(b) notional flat width b_p of plane parts of flanges

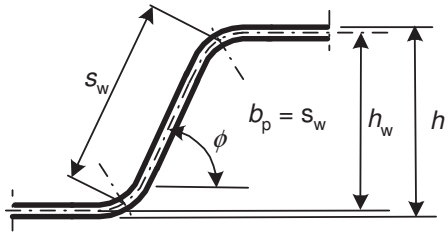

(c) notional flat width b_p for a web

(b_p = slant height s_w)

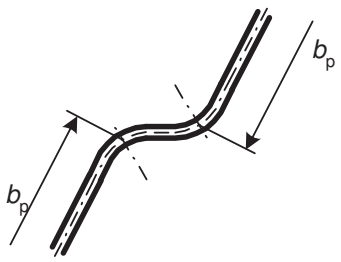

(d) notional flat width b_p of plane parts adjacent to web stiffener

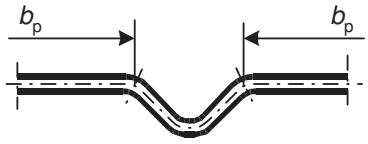

(e) notional flat width b_p of flat parts adjacent to flange stiffener

Figure 5.1: Notional widths of plane cross section parts b_p allowing for corner radii

(4) The influence of rounded corners on section properties may be taken into account by reducing the properties calculated for an otherwise similar cross-section with sharp corners, see figure 5.2, using the following approximations:

$$A_g \approx A_{g,sh}\,(1 - \delta) \qquad \ldots (5.1a)$$

$$I_g \approx I_{g,sh}\,(1 - 2\delta) \qquad \ldots (5.1b)$$

$$I_w \approx I_{w,sh}\,(1 - 4\delta) \qquad \ldots (5.1c)$$

with:

Documento contenuto nel prodotto EUROCODICI edizione 2011. E' vietato l'uso in rete del singolo documento e la sua riproduzione. E' autorizzata la stampa per uso interno.

$$\delta = 0{,}43 \frac{\sum_{j=1}^{n} r_j \frac{\phi_j}{90°}}{\sum_{i=1}^{m} b_{p,i}} \qquad \ldots (5.1d)$$

where:

A_g	is	the area of the gross cross-section;
$A_{g,sh}$	is	the value of A_g for a cross-section with sharp corners;
$b_{p,i}$	is	the notional flat width of plane element i for a cross-section with sharp corners;
I_g	is	the second moment of area of the gross cross-section;
$I_{g,sh}$	is	the value of I_g for a cross-section with sharp corners;
I_w	is	the warping constant of the gross cross-section;
$I_{w,sh}$	is	the value of I_w for a cross-section with sharp corners;
ϕ	is	the angle between two plane elements;
m	is	the number of plane elements;
n	is	the number of curved elements;
r_j	is	the internal radius of curved element j.

(5) The reductions given by expression (5.1) may also be applied in calculating the effective section properties A_{eff}, $I_{y,eff}$, $I_{z,eff}$ and $I_{w,eff}$, provided that the notional flat widths of the plane elements are measured to the points of intersection of their midlines.

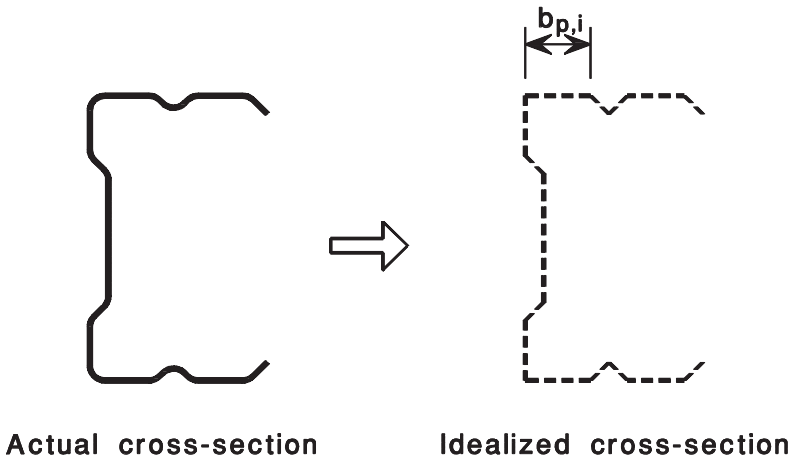

Figure 5.2: Approximate allowance for rounded corners

(6) Where the internal radius $r > 0{,}04\, t\, E / f_y$ then the resistance of the cross-section should be determined by tests.

5.2 Geometrical proportions

(1) The provisions for design by calculation given in this Part 1-3 of EN 1993 should not be applied to cross-sections outside the range of width-to-thickness ratios *b/t*, *h/t*, *c/t* and *d/t* given in Table 5.1.

Documento contenuto nel prodotto EUROCODICI edizione 2011. E' vietato l'uso in rete del singolo documento e la sua riproduzione. E' autorizzata la stampa per uso interno.

NOTE: These limits *b/t*, *h/t*, *c/t* and *d/t* given in table 5.1 may be assumed to represent the field for which sufficient experience and verification by testing is already available. Cross-sections with larger width-to-thickness ratios may also be used, provided that their resistance at ultimate limit states and their behaviour at serviceability limit states are verified by testing and/or by calculations, where the results are confirmed by an appropriate number of tests.

Table 5.1: Maximum width-to-thickness ratios

Element of cross-section	Maximum value
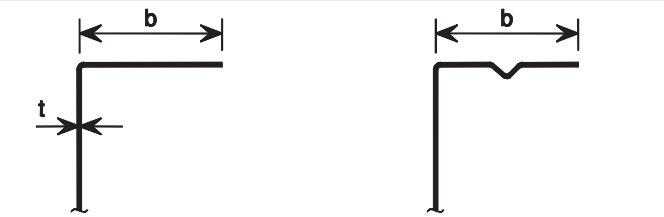	$b/t \leq 50$
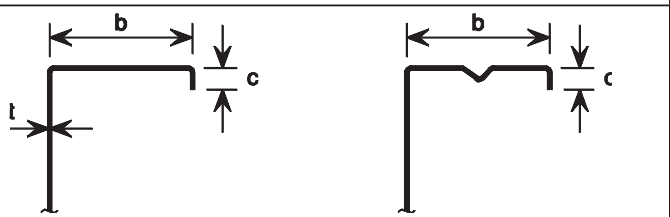	$b/t \leq 60$ $c/t \leq 50$
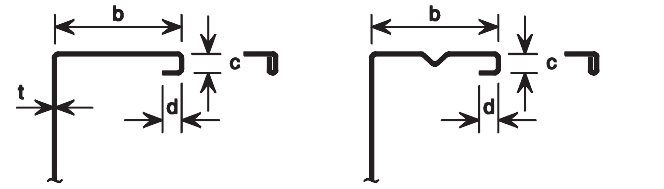	$b/t \leq 90$ $c/t \leq 60$ $d/t \leq 50$
	$b/t \leq 500$
	$45° \leq \phi \leq 90°$ $h/t \leq 500 \sin\phi$

(2) In order to provide sufficient stiffness and to avoid primary buckling of the stiffener itself, the sizes of stiffeners should be within the following ranges:

$$0{,}2 \leq c/b \leq 0{,}6 \qquad \ldots (5.2a)$$

$$0{,}1 \leq d/b \leq 0{,}3 \qquad \ldots (5.2b)$$

in which the dimensions b, c and d are as indicated in table 5.1. If $c/b < 0{,}2$ or $d/b < 0{,}1$ the lip should be ignored ($c = 0$ or $d = 0$).

NOTE 1: Where effective cross-section properties are determined by testing and by calculations, these limits do not apply.

NOTE 2: The lip measure c is perpendicular to the flange if the lip is not perpendicular to the flange.

NOTE 3: For FE-methods see Annex C of EN 1993-1-5.

Documento contenuto nel prodotto EUROCODICI edizione 2011. E' vietato l'uso in rete del singolo documento e la sua riproduzione. E' autorizzata la stampa per uso interno.

5.3 Structural modelling for analysis

(1) Unless more appropriate models are used according to EN 1993-1-5 the elements of a cross-section may be modelled for analysis as indicated in table 5.2.

(2) The mutual influence of multiple stiffeners should be taken into account.

(3) Imperfections related to flexural buckling and torsional flexural buckling should be taken from table 5.1 of EN 1993-1-1

NOTE: See also clause 5.3.4 of EN 1993-1-1.

(4) For imperfections related to lateral torsional buckling an initial bow imperfections e_0 of the weak axis of the profile may be assumed without taking account at the same time an initial twist

NOTE: The magnitude of the imperfection may be taken from the National Annex. The values e_0/L = 1/600 for elastic analysis and e_0/L = 1/500 for plastic analysis are recommended for sections assigned to LTB buckling curve a taken from EN 1993-1-1, section 6.3.2.2.

Table 5.2: Modelling of elements of a cross-section

Type of element	Model	Type of element	Model
			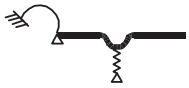
		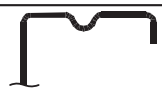	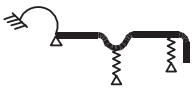
			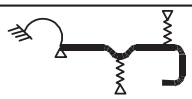

5.4 Flange curling

(1) The effect on the loadbearing resistance of curling (i.e. inward curvature towards the neutral plane) of a very wide flange in a profile subjected to flexure, or of a flange in an arched profile subjected to flexure in which the concave side is in compression, should be taken into account unless such curling is less than 5% of the depth of the profile cross-section. If curling is larger, then the reduction in loadbearing resistance, for instance due to a decrease in the length of the lever arm for parts of the wide flanges, and to the possible effect of the bending of the webs should be taken into account.

NOTE: For liner trays this effect has been taken into account in 10.2.2.2.

Documento contenuto nel prodotto EUROCODICI edizione 2011. E' vietato l'uso in rete del singolo documento e la sua riproduzione. E' autorizzata la stampa per uso interno.

(2) Calculation of the curling may be carried out as follows. The formulae apply to both compression and tensile flanges, both with and without stiffeners, but without closely spaced transversal stiffeners at flanges. For a profile which is straight prior to application of loading (see figure 5.3).

$$u = 2\frac{\sigma_a^{\ 2}}{E^2}\frac{b_s^{\ 4}}{t^2 z} \qquad \text{... (5.3a)}$$

For an arched beam:

$$u = 2\frac{\sigma_a}{E}\frac{b_s^{\ 4}}{t^2 r} \qquad \text{... (5.3b)}$$

where:

- u is bending of the flange towards the neutral axis (curling), see figure 5.3;
- b_s is one half the distance between webs in box and hat sections, or the width of the portion of flange projecting from the web, see figure 5.3;
- t is flange thickness;
- z is distance of flange under consideration from neutral axis;
- r is radius of curvature of arched beam;
- σ_a is mean stress in the flanges calculated with gross area. If the stress has been calculated over the effective cross-section, the mean stress is obtained by multiplying the stress for the effective cross-section by the ratio of the effective flange area to the gross flange area.

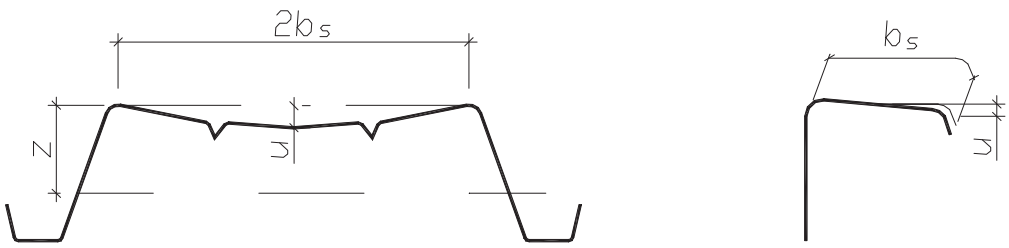

Figure 5.3: Flange curling

5.5 Local and distortional buckling

5.5.1 General

(1) The effects of local and distortional buckling should be taken into account in determining the resistance and stiffness of cold-formed members and sheeting.

(2) Local buckling effects may be accounted for by using effective cross-sectional properties, calculated on the basis of the effective widths, see EN 1993-1-5.

(3) In determining resistance to local buckling, the yield strength f_y should be taken as f_{yb} when calculating effective widths of compressed elements in EN 1993-1-5.

NOTE: For resistance see 6.1.3(1).

(4) For serviceability verifications, the effective width of a compression element should be based on the compressive stress $\sigma_{com,Ed,ser}$ in the element under the serviceability limit state loading.

(5) The distortional buckling for elements with edge or intermediate stiffeners as indicated in figure 5.4(d) are considered in Section 5.5.3.

Documento contenuto nel prodotto EUROCODICI edizione 2011. E' vietato l'uso in rete del singolo documento e la sua riproduzione. E' autorizzata la stampa per uso interno.

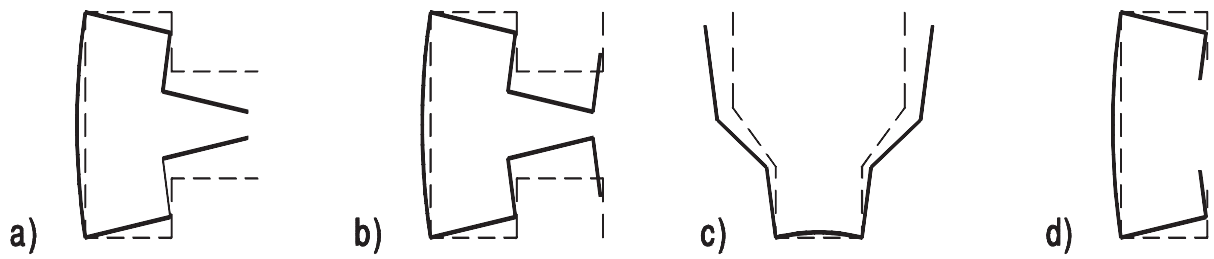

Figure 5.4: Examples of distortional buckling modes

(6) The effects of distortional buckling should be allowed for in cases such as those indicated in figures 5.4(a), (b) and (c). In these cases the effects of distortional buckling should be determined performing linear (see 5.5.1(7)) or non-linear buckling analysis (see EN 1993-1-5) using numerical methods or column stub tests.

(7) Unless the simplified procedure in 5.5.3 is used and where the elastic buckling stress is obtained from linear buckling analysis the following procedure may be applied:

1) For the wavelength up to the nominal member length, calculate the elastic buckling stress and identify the corresponding buckling modes, see figure 5.5a.
2) Calculate the effective width(s) according to 5.5.2 for locally buckled cross-section parts based on the minimum local buckling stress, see figure 5.5b.
3) Calculate the reduced thickness (see 5.5.3.1(7)) of edge and intermediate stiffeners or other cross-section parts undergoing distortional buckling based on the minimum distortional buckling stress, see figure 5.5b.
4) Calculate overall buckling resistance according to 6.2 (flexural, torsional or lateral-torsional buckling depending on buckling mode) for nominal member length and based on the effective cross-section from 2) and 3).

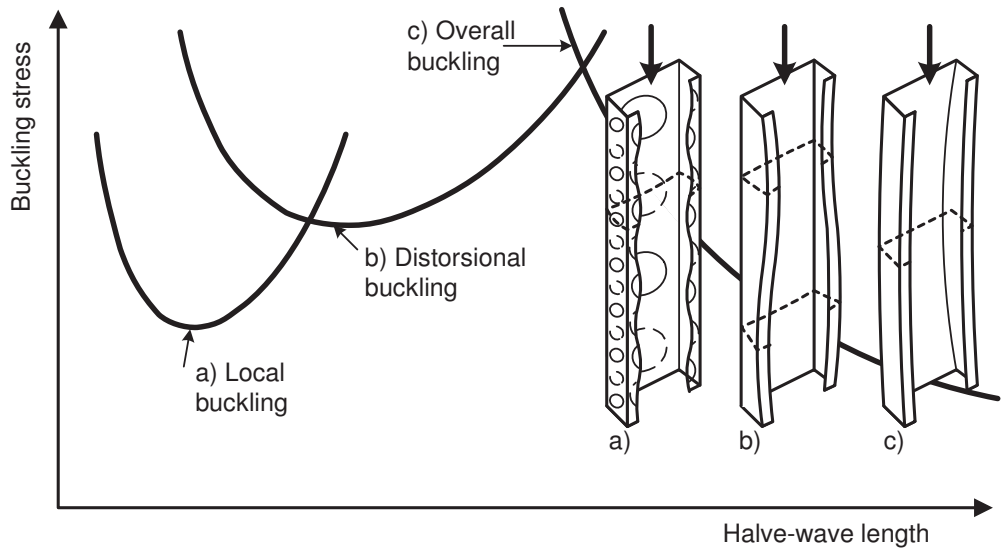

Figure 5.5a: Examples of elastic critical stress for various buckling modes as function of *halve-wave length* and examples of buckling modes.

Documento contenuto nel prodotto EUROCODICI edizione 2011. E' vietato l'uso in rete del singolo documento e la sua riproduzione. E' autorizzata la stampa per uso interno.

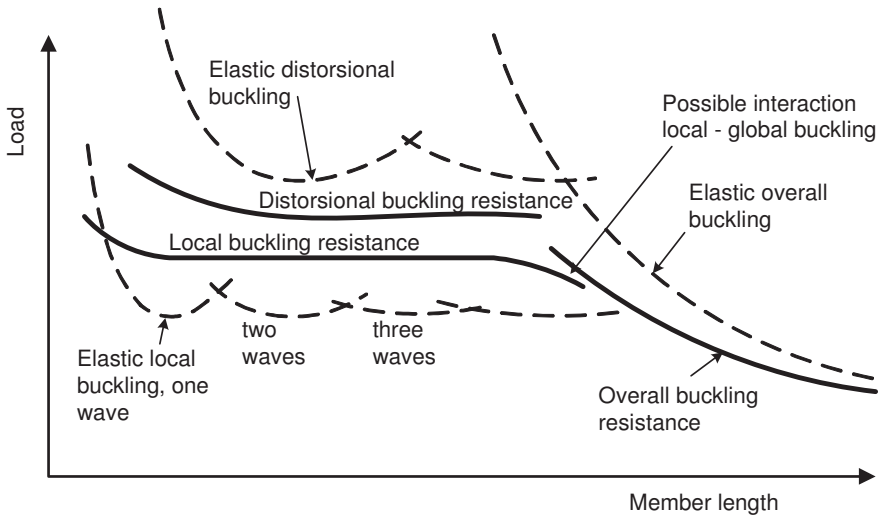

Figure 5.5 b: Examples of elastic buckling load and buckling resistance as a function of member length

5.5.2 Plane elements without stiffeners

(1) The effective widths of unstiffened elements should be obtained from EN 1993-1-5 using the notional flat width b_p for $\bar{b}$ by determining the reduction factors for plate buckling based on the plate slenderness $\bar{\lambda}_p$.

(2) The notional flat width b_p of a plane element should be determined as specified in figure 5.1 of section 5.1.4. In the case of plane elements in a sloping webs, the appropriate slant height should be used.

NOTE: For outstands an alternative method for calculating effective widths is given in Annex D.

(3) In applying the method in EN 1993-1-5 the following procedure may be used:

- The stress ratio ψ, from tables 4.1 and 4.2 used to determine the effective width of flanges of a section subject to stress gradient, may be based on gross section properties.
- The stress ratio ψ, from table 4.1 and 4.2 used to determine the effective width of web, may be obtained using the effective area of compression flange and the gross area of the web.
- The effective section properties may be refined by using the stress ratio ψ based on the effective cross-section already found in place of the gross cross-section. The minimum steps in the iteration dealing with the stress gradient are two.
- The simplified method given in 5.5.3.4 may be used in the case of webs of trapezoidal sheeting under stress gradient.

5.5.3 Plane elements with edge or intermediate stiffeners

5.5.3.1 General

(1) The design of compression elements with edge or intermediate stiffeners should be based on the assumption that the stiffener behaves as a compression member with continuous partial restraint, with a spring stiffness that depends on the boundary conditions and the flexural stiffness of the adjacent plane elements.

(2) The spring stiffness of a stiffener should be determined by applying an unit load per unit length u as illustrated in figure 5.6. The spring stiffness K per unit length may be determined from:

$$K = u/\delta \qquad \text{... (5.9)}$$

where:

δ is the deflection of the stiffener due to the unit load u acting in the centroid (b_1) of the effective part of the cross-section.

Documento contenuto nel prodotto EUROCODICI edizione 2011. E' vietato l'uso in rete del singolo documento e la sua riproduzione. E' autorizzata la stampa per uso interno.

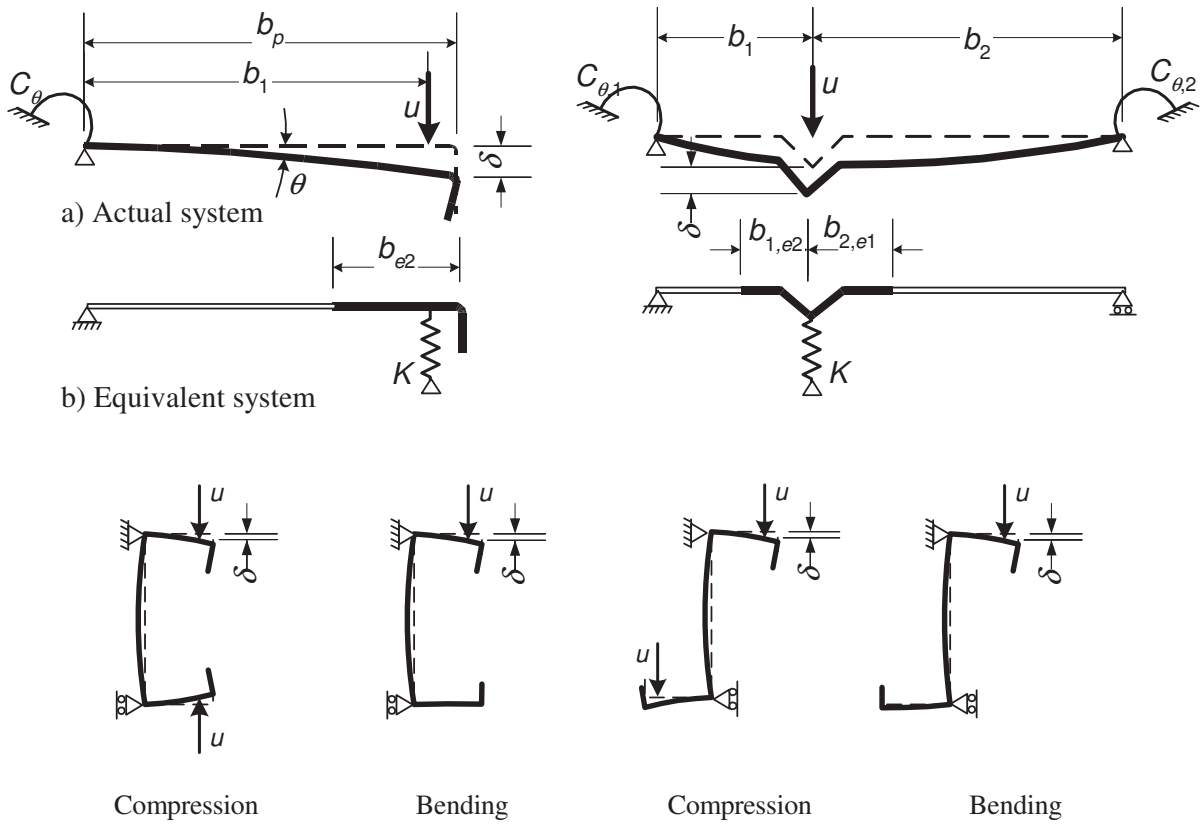

c) Calculation of δ for C and Z sections

Figure 5.6: Determination of spring stiffness

(3) In determining the values of the rotational spring stiffnesses C_θ, $C_{\theta,1}$ and $C_{\theta,2}$ from the geometry of the cross-section, account should be taken of the possible effects of other stiffeners that exist on the same element, or on any other element of the cross-section that is subject to compression.

(4) For an edge stiffener, the deflection δ should be obtained from:

$$\delta = \theta\, b_\mathrm{p} + \frac{u b_\mathrm{p}^{\,3}}{3} \cdot \frac{12\left(1 - \nu^2\right)}{E t^3} \qquad \text{... (5.10a)}$$

with:

$$\theta = u\, b_\mathrm{p} / C_\theta$$

Documento contenuto nel prodotto EUROCODICI edizione 2011. E' vietato l'uso in rete del singolo documento e la sua riproduzione. E' autorizzata la stampa per uso interno.

(5) In the case of the edge stiffeners of lipped C-sections and lipped Z-sections, C_θ should be determined with the unit loads u applied as shown in figure 5.6(c). This results in the following expression for the spring stiffness K_1 for the flange 1:

$$K_1 = \frac{E\,t^3}{4\,(1-\nu^2)} \cdot \frac{1}{b_1^2\,h_w + b_1^3 + 0{,}5\,b_1\,b_2\,h_w\,k_f} \qquad \ldots (5.10b)$$

where:

b_1 is the distance from the web-to-flange junction to the gravity center of the effective area of the edge stiffener (including effective part b_{e2} of the flange) of flange 1, see figure 5.6(a);

b_2 is the distance from the web-to-flange junction to the gravity center of the effective area of the edge stiffener (including effective part of the flange) of flange 2;

h_w is the web depth;

$k_f = 0$ if flange 2 is in tension (e.g. for beam in bending about the y-y axis);

$k_f = \frac{A_{s2}}{A_{s1}}$ if flange 2 is also in compression (e.g. for a beam in axial compression);

$k_f = 1$ for a symmetric section in compression.

A_{s1} and A_{s2} is the effective area of the edge stiffener (including effective part b_{e2} of the flange, see figure 5.6(b)) of flange 1 and flange 2 respectively.

(6) For an intermediate stiffener, as a conservative alternative the values of the rotational spring stiffnesses $C_{\theta 1}$ and $C_{\theta 2}$ may be taken as equal to zero, and the deflection δ may be obtained from:

$$\delta = \frac{u b_1^{\,2} b_2^{\,2}}{3(b_1 + b_2)} \cdot \frac{12(1-\nu^2)}{E t^3} \qquad \ldots (5.11)$$

(7) The reduction factor χ_d for the distortional buckling resistance (flexural buckling of a stiffener) should be obtained from the relative slenderness $\bar{\lambda}_d$ from:

$$\chi_d = 1{,}0 \qquad \text{if } \bar{\lambda}_d \le 0{,}65 \qquad \ldots (5.12a)$$

$$\chi_d = 1{,}47 - 0{,}723\bar{\lambda}_d \qquad \text{if } 0{,}65 < \bar{\lambda}_d < 1{,}38 \qquad \ldots (5.12b)$$

$$\chi_d = \frac{0{,}66}{\bar{\lambda}_d} \qquad \text{if } \bar{\lambda}_d \ge 1{,}38 \qquad \ldots (5.12c)$$

where:

$$\bar{\lambda}_d = \sqrt{f_{yb} / \sigma_{cr,s}} \qquad \ldots (5.12d)$$

where:

$\sigma_{cr,s}$ is the elastic critical stress for the stiffener(s) from 5.5.3.2, 5.5.3.3 or 5.5.3.4.

(8) Alternatively, the elastic critical buckling stress $\sigma_{cr,s}$ may be obtained from elastic first order buckling analysis using numerical methods (see 5.5.1(7)).

(9) In the case of a plane element with an edge and intermediate stiffener(s) in the absence of a more accurate method the effect of the intermediate stiffener(s) may be neglected.

Documento contenuto nel prodotto EUROCODICI edizione 2011. E' vietato l'uso in rete del singolo documento e la sua riproduzione. E' autorizzata la stampa per uso interno.

5.5.3.2 Plane elements with edge stiffeners

(1) The following procedure is applicable to an edge stiffener if the requirements in 5.2 are met and the angle between the stiffener and the plane element is between 45° and 135°.

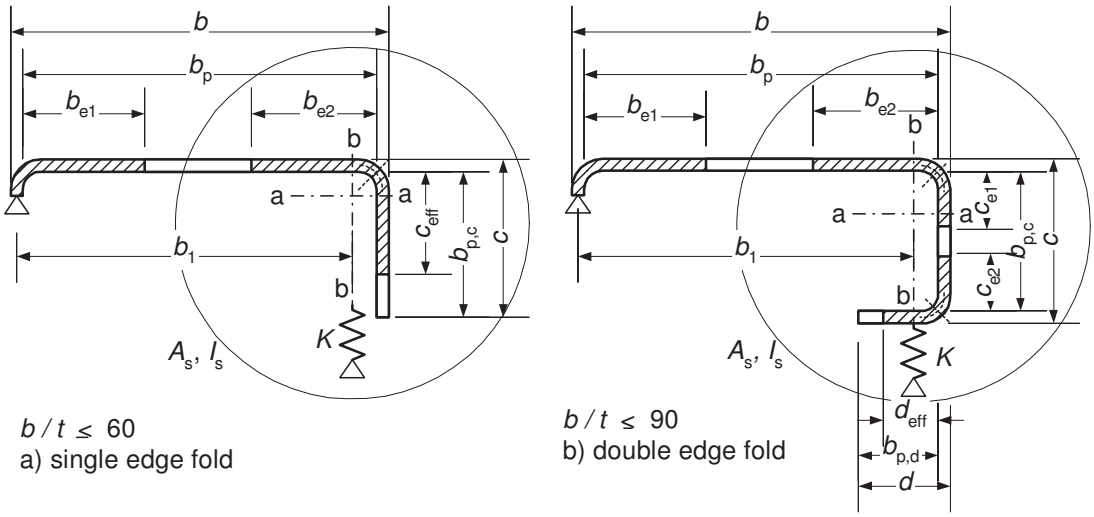

Figure 5.7: Edge stiffeners

(2) The cross-section of an edge stiffener should be taken as comprising the effective portions of the stiffener, element c or elements c and d as shown in figure 5.7, plus the adjacent effective portion of the plane element b_p.

(3) The procedure, which is illustrated in figure 5.8, should be carried out in steps as follows:

- **Step 1**: Obtain an initial effective cross-section for the stiffener using effective widths determined by assuming that the stiffener gives full restraint and that $\sigma_{com,Ed} = f_{yb}/\gamma_{M0}$, see (4) to (5);
- **Step 2**: Use the initial effective cross-section of the stiffener to determine the reduction factor for distortional buckling (flexural buckling of a stiffener), allowing for the effects of the continuous spring restraint, see (6), (7) and (8);
- **Step 3**: Optionally iterate to refine the value of the reduction factor for buckling of the stiffener, see (9) and (10).

(4) Initial values of the effective widths b_{e1} and b_{e2} shown in figure 5.7 should be determined from clause 5.5.2 by assuming that the plane element b_p is doubly supported, see table 4.1 in EN 1993-1-5.

Documento contenuto nel prodotto EUROCODICI edizione 2011. E' vietato l'uso in rete del singolo documento e la sua riproduzione. E' autorizzata la stampa per uso interno.

(5) Initial values of the effective widths c_{eff} and d_{eff} shown in figure 5.7 should be obtained as follows:

a) for a single edge fold stiffener:

$$c_{eff} = \rho\, b_{p,c} \qquad \text{... (5.13a)}$$

with ρ obtained from 5.5.2, except using a value of the buckling factor k_σ given by the following:

- if $b_{p,c}/b_p \leq 0{,}35$:

$$k_\sigma = 0{,}5 \qquad \text{... (5.13b)}$$

- if $0{,}35 < b_{p,c}/b_p \leq 0{,}6$:

$$k_\sigma = 0{,}5 + 0{,}83\sqrt[3]{\left(b_{p,c}/b_p - 0{,}35\right)^2} \qquad \text{...(5.13c)}$$

b) for a double edge fold stiffener:

$$c_{eff} = \rho\, b_{p,c} \qquad \text{... (5.13d)}$$

with ρ obtained from 5.5.2 with a buckling factor k_σ for a doubly supported element from table 4.1 in EN 1993-1-5

$$d_{eff} = \rho\, b_{p,d} \qquad \text{... (5.13e)}$$

with ρ obtained from 5.5.2 with a buckling factor k_σ for an outstand element from table 4.2 in EN 1993-1-5.

(6) The effective cross-sectional area of the edge stiffener A_s should be obtained from:

$$A_s = t\,(b_{e2} + c_{eff}) \qquad \text{or} \qquad \text{... (5.14a)}$$

$$A_s = t\,(b_{e2} + c_{e1} + c_{e2} + d_{eff}) \qquad \text{…(5.14b)}$$

respectively.

NOTE: The rounded corners should be taken into account if needed, see 5.1.

(7) The elastic critical buckling stress $\sigma_{cr,s}$ for an edge stiffener should be obtained from:

$$\sigma_{cr,s} = \frac{2\sqrt{K\,E\,I_s}}{A_s} \qquad \text{... (5.15)}$$

where:

K is the spring stiffness per unit length, see 5.5.3.1(2).

I_s is the effective second moment of area of the stiffener, taken as that of its effective area A_s about the centroidal axis a - a of its effective cross-section, see figure 5.7.

(8) Alternatively, the elastic critical buckling stress $\sigma_{cr,s}$ may be obtained from elastic first order buckling analyses using numerical methods, see 5.5.1(7).

(9) The reduction factor χ_d for the distortional buckling (flexural buckling of a stiffener) resistance of an edge stiffener should be obtained from the value of $\sigma_{cr,s}$ using the method given in 5.5.3.1(7).

Documento contenuto nel prodotto EUROCODICI edizione 2011. E' vietato l'uso in rete del singolo documento e la sua riproduzione. E' autorizzata la stampa per uso interno.

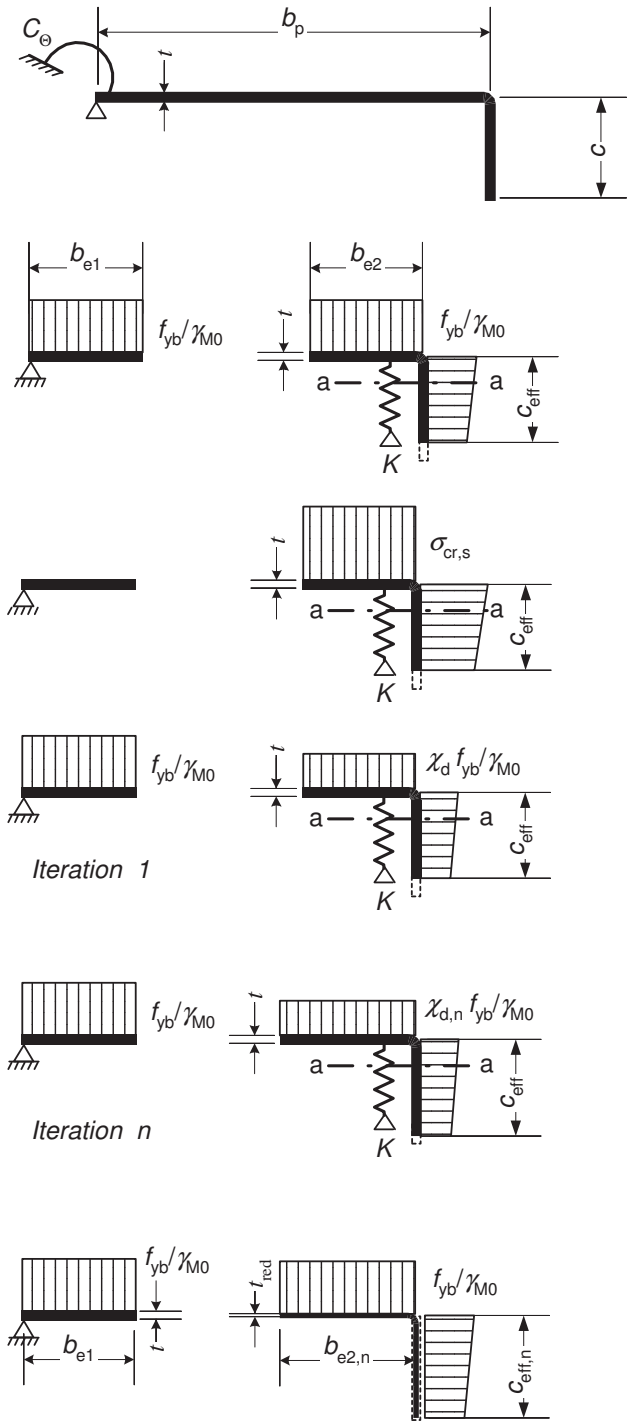

a) Gross cross-section and boundary conditions

b) **Step 1**: Effective cross-section for $K = \infty$ based on $\sigma_{com,Ed} = f_{yb}/\gamma_{M0}$

c) **Step 2**: Elastic critical stress $\sigma_{cr,s}$ for effective area of stiffener A_s from step 1

d) Reduced strength $\chi_d f_{yb}/\gamma_{M0}$ for effective area of stiffener A_s, with reduction factor χ_d based on $\sigma_{cr,s}$

e) **Step 3**: Optionally repeat step 1 by calculating the effective width with a reduced compressive stress $\sigma_{com,Ed,i} = \chi_d f_{yb} / \gamma_{M0}$ with χ_d from previous iteration, continuing until $\chi_{d,n} \approx \chi_{d,(n-1)}$ but $\chi_{d,n} \leq \chi_{d,(n-1)}$.

f) Adopt an effective cross-section with b_{e2}, c_{eff} and reduced thickness t_{red} corresponding to $\chi_{d,n}$

Figure 5.8: Compression resistance of a flange with an edge stiffener

(10) If $\chi_d < 1$ it may be refined iteratively, starting the iteration with modified values of ρ obtained using 5.5.2(5) with $\sigma_{com,Ed,i}$ equal to $\chi_d f_{yb}/\gamma_{M0}$, so that:

$$\bar{\lambda}_{p,red} = \bar{\lambda}_p \sqrt{\chi_d} \qquad \text{... (5.16)}$$

Documento contenuto nel prodotto EUROCODICI edizione 2011. E' vietato l'uso in rete del singolo documento e la sua riproduzione. E' autorizzata la stampa per uso interno.

(11) The reduced effective area of the stiffener $A_{s,red}$ allowing for flexural buckling should be taken as:

$$A_{s,red} = \chi_d A_s \frac{f_{yb}/\gamma_{M0}}{\sigma_{com,Ed}} \qquad \text{but } A_{s,red} \leq A_s \qquad \text{... (5.17)}$$

where

$\sigma_{com,Ed}$ is compressive stress at the centreline of the stiffener calculated on the basis of the effective cross-section.

(12) I n determining effective section properties, the reduced effective area $A_{s,red}$ should be represented by using a reduced thickness $t_{red} = t\, A_{s,red} / A_s$ for all the elements included in A_s.

5.5.3.3 Plane elements with intermediate stiffeners

(1) The following procedure is applicable to one or two equal intermediate stiffeners formed by grooves or bends provided that all plane elements are calculated according to 5.5.2.

(2) The cross-section of an intermediate stiffener should be taken as comprising the stiffener itself plus the adjacent effective portions of the adjacent plane elements $b_{p,1}$ and $b_{p,2}$ shown in figure 5.9.

(3) The procedure, which is illustrated in figure 5.10, should be carried out in steps as follows:

- **Step 1**: Obtain an initial effective cross-section for the stiffener using effective widths determined by assuming that the stiffener gives full restraint and that $\sigma_{com,Ed} = f_{yb}/\gamma_{M0}$, see (4) and (5);

- **Step 2**: Use the initial effective cross-section of the stiffener to determine the reduction factor for distortional buckling (flexural buckling of an intermediate stiffener), allowing for the effects of the continuous spring restraint, see (6), (7) and (8);

- **Step 3**: Optionally iterate to refine the value of the reduction factor for buckling of the stiffener, see (9) and (10).

(4) Initial values of the effective widths $b_{1,e2}$ and $b_{2,e1}$ shown in figure 5.9 should be determined from 5.5.2 by assuming that the plane elements $b_{p,1}$ and $b_{p,2}$ are doubly supported, see table 4.1 in EN 1993-1-5.

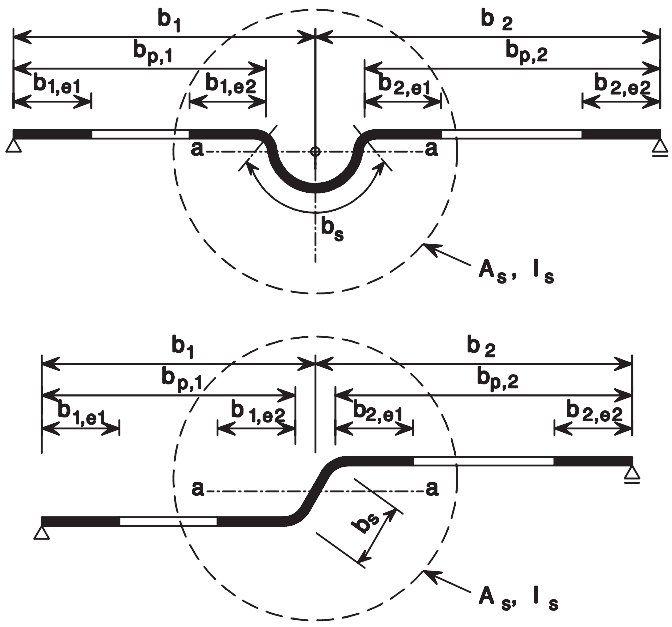

Figure 5.9: Intermediate stiffeners

(5) The effective cross-sectional area of an intermediate stiffener A_s should be obtained from:

$$A_s = t\,(b_{1,e2} + b_{2,e1} + b_s) \qquad \text{... (5.18)}$$

in which the stiffener width b_s is as shown in figure 5.9.

Documento contenuto nel prodotto EUROCODICI edizione 2011. E' vietato l'uso in rete del singolo documento e la sua riproduzione. E' autorizzata la stampa per uso interno.

NOTE: The rounded corners should be taken into account if needed, see 5.1.

(6) The critical buckling stress $\sigma_{cr,s}$ for an intermediate stiffener should be obtained from:

$$\sigma_{cr,s} = \frac{2\sqrt{KEI_s}}{A_s} \qquad \text{... (5.19)}$$

where:

K is the spring stiffness per unit length, see 5.5.3.1(2).

I_s is the effective second moment of area of the stiffener, taken as that of its effective area A_s about the centroidal axis a - a of its effective cross-section, see figure 5.9.

(7) Alternatively, the elastic critical buckling stress $\sigma_{cr,s}$ may be obtained from elastic first order buckling analyses using numerical methods, see 5.5.1(7).

(8) The reduction factor χ_d for the distortional buckling resistance (flexural buckling of an intermediate stiffener) should be obtained from the value of $\sigma_{cr,s}$ using the method given in 5.5.3.1(7).

(9) If $\chi_d < 1$ it may optionally be refined iteratively, starting the iteration with modified values of ρ obtained using 5.5.2(5) with $\sigma_{com,Ed,i}$ equal to $\chi_d f_{yb}/\gamma_{M0}$, so that:

$$\bar{\lambda}_{p,red} = \bar{\lambda}_p \sqrt{\chi_d} \qquad \text{... (5.20)}$$

(10) The reduced effective area of the stiffener $A_{s,red}$ allowing for distortional buckling (flexural buckling of a stiffener) should be taken as:

$$A_{s,red} = \chi_d A_s \frac{f_{yb}/\gamma_{M0}}{\sigma_{com,Ed}} \quad \text{but } A_{s,red} \le A_s \qquad \text{... (5.21)}$$

where

$\sigma_{com,Ed}$ is compressive stress at the centreline of the stiffener calculated on the basis of the effective cross-section.

(11) In determining effective section properties, the reduced effective area $A_{s,red}$ should be represented by using a reduced thickness $t_{red} = t\, A_{s,red} / A_s$ for all the elements included in A_s.

Documento contenuto nel prodotto EUROCODICI edizione 2011. E' vietato l'uso in rete del singolo documento e la sua riproduzione. E' autorizzata la stampa per uso interno.

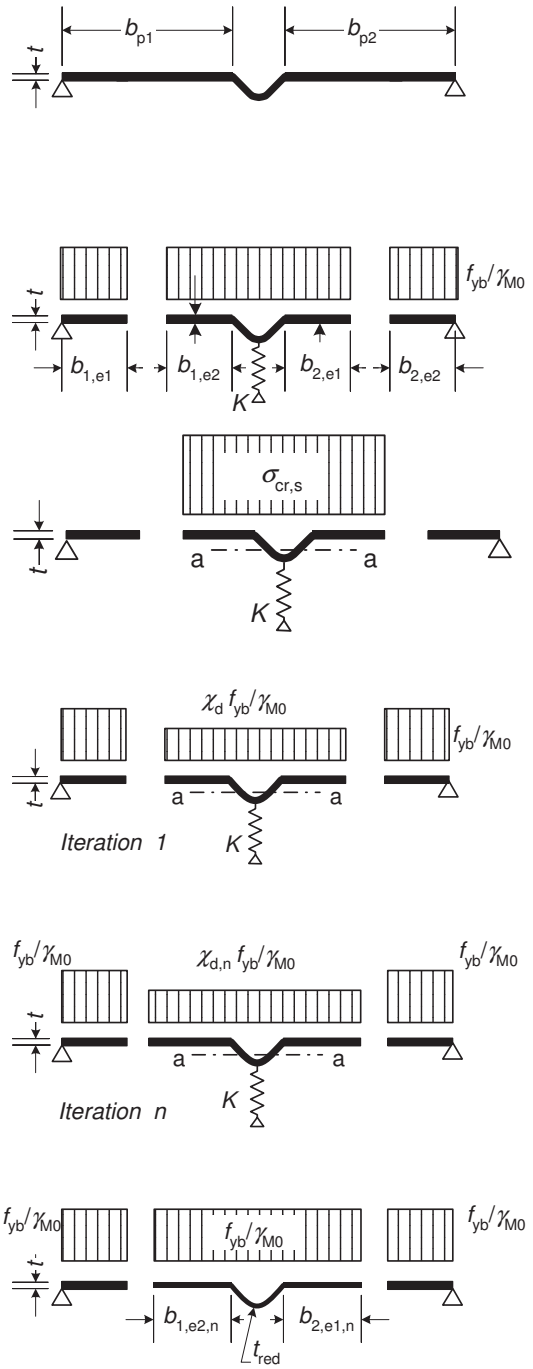

a) Gross cross-section and boundary conditions

b) **Step 1**: Effective cross-section for $K = \infty$ based on $\sigma_{com,Ed} = f_{yb} / \gamma_{M0}$

c) **Step 2**: Elastic critical stress $\sigma_{cr,s}$ for effective area of stiffener A_s from step 1

d) Reduced strength $\chi_d f_{yb} / \gamma_{M0}$ for effective area of stiffener A_s, with reduction factor χ_d based on $\sigma_{cr,s}$

e) **Step 3**: Optionally repeat step 1 by calculating the effective width with a reduced compressive stress $\sigma_{com,Ed,i} = \chi_d f_{yb} / \gamma_{M0}$ with χ_d from previous iteration, continuing until $\chi_{d,n} \approx \chi_{d,(n-1)}$ but $\chi_{d,n} \leq \chi_{d,(n-1)}$.

f) Adopt an effective cross-section with $b_{1,e2}$, $b_{2,e1}$ and reduced thickness t_{red} corresponding to $\chi_{d,n}$

Figure 5.10: Compression resistance of a flange with an intermediate stiffener

Documento contenuto nel prodotto EUROCODICI edizione 2011. E' vietato l'uso in rete del singolo documento e la sua riproduzione. E' autorizzata la stampa per uso interno.

5.5.3.4 Trapezoidal sheeting profiles with intermediate stiffeners

5.5.3.4.1 General

(1) This sub-clause 5.5.3.4 should be used for trapezoidal profiled sheets, in association with 5.5.3.3 for flanges with intermediate flange stiffeners and 5.5.3.3 for webs with intermediate stiffeners.

(2) Interaction between the buckling of intermediate flange stiffeners and intermediate web stiffeners should also be taken into account using the method given in 5.5.3.4.4.

5.5.3.4.2 Flanges with intermediate stiffeners

(1) If it is subject to uniform compression, the effective cross-section of a flange with intermediate stiffeners should be assumed to consist of the reduced effective areas $A_{s,red}$ including two strips of width $0{,}5b_{eff}$ (or 15 t, see figure 5.11) adjacent to the stiffener.

(2) For one central flange stiffener, the elastic critical buckling stress $\sigma_{cr,s}$ should be obtained from:

$$\sigma_{cr,s} = \frac{4{,}2\,k_w E}{A_s}\sqrt{\frac{I_s\ t^3}{4\ b_p^2\ (2\ b_p + 3\ b_s)}} \qquad \text{... (5.22)}$$

where:

b_p is the notional flat width of plane element shown in figure 5.11;

b_s is the stiffener width, measured around the perimeter of the stiffener, see figure 5.11;

A_s, I_s are the cross-section area and the second moment of area of the stiffener cross-section according to figure 5.11;

k_w is a coefficient that allows for partial rotational restraint of the stiffened flange by the webs or other adjacent elements, see (5) and (6). For the calculation of the effective cross-section in axial compression the value $k_w = 1{,}0$.

The equation 5.22 may be used for wide grooves provided that flat part of the stiffener is reduced due to local buckling and b_p in the equation 5.22 is replaced by the larger of b_p and $0{,}25(3b_p+b_r)$, see figure 5.11. Similar method is valid for flange with two or more wide grooves.

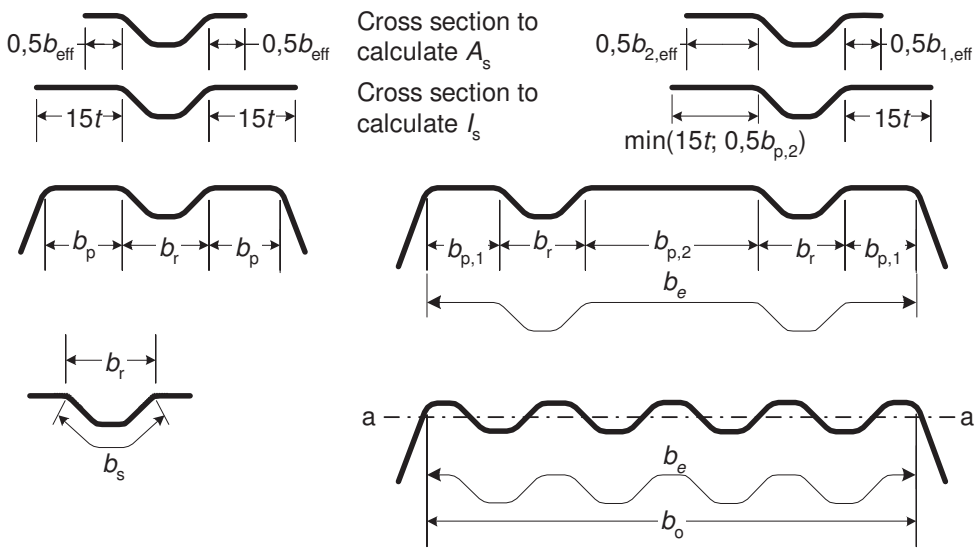

Figure 5.11: Compression flange with one, two or multiple stiffeners

Documento contenuto nel prodotto EUROCODICI edizione 2011. E' vietato l'uso in rete del singolo documento e la sua riproduzione. E' autorizzata la stampa per uso interno.

(3) For two symmetrically placed flange stiffeners, the elastic critical buckling stress $\sigma_{cr,s}$ should be obtained from:

$$\sigma_{cr,s} = \frac{4{,}2\ k_w\ E}{A_s}\sqrt{\frac{I_s\ t^3}{8\ b_1^2\ (3\ b_e - 4\ b_1)}} \qquad \text{... (5.23a)}$$

with:

$$b_e = 2b_{p,1} + b_{p,2} + 2b_s$$

$$b_1 = b_{p,1} + 0{,}5\, b_r$$

where:

$b_{p,1}$ is the notional flat width of an outer plane element, as shown in figure 5.11;

$b_{p,2}$ is the notional flat width of the central plane element, as shown in figure 5.11;

b_r is the overall width of a stiffener, see figure 5.11;

A_s, I_s are the cross-section area and the second moment of area of the stiffener cross-section according to figure 5.11.

(4) For a multiple stiffened flange (three or more equal stiffeners) the effective area of the *entire flange* is

$$A_{eff} = \rho b_e t \qquad \text{…(5.23b)}$$

where ρ is the reduction factor according to EN 1993-1-5, Annex E for the slenderness $\bar{\lambda}_p$ based on the elastic buckling stress

$$\sigma_{cr,s} = 1{,}8E\sqrt{\frac{I_s\ t}{b_o^2 b_e^3}} + 3{,}6\frac{Et^2}{b_o^2} \qquad \text{…(5.23c)}$$

where:

I_s is the sum of the second moment of area of the stiffeners about the centroidal axis a-a, neglecting the thickness terms $bt^3/12$;

b_o is the width of the flange as shown in figure 5.11;

b_e is the developed width of the flange as shown in figure 5.11.

(5) The value of k_w may be calculated from the compression flange buckling wavelength l_b as follows:

- if $l_b/s_w \geq 2$:

$$k_w = k_{wo} \qquad \text{...(5.24a)}$$

- if $l_b/s_w < 2$:

$$k_w = k_{wo} - (k_{wo} - 1)\left[\frac{2l_b}{s_w} - \left(\frac{l_b}{s_w}\right)^2\right] \qquad \text{...(5.24b)}$$

where:

s_w is the slant height of the web, see figure 5.1(c).

(6) Alternatively, the rotational restraint coefficient k_w may conservatively be taken as equal to 1,0 corresponding to a pin-jointed condition.

Documento contenuto nel prodotto EUROCODICI edizione 2011. E' vietato l'uso in rete del singolo documento e la sua riproduzione. E' autorizzata la stampa per uso interno.

(7) The values of l_b and k_{wo} may be determined from the following:

- for a compression flange with one intermediate stiffener:

$$l_b = 3{,}07 \sqrt[4]{\frac{I_s \, b_p^2 \, (2 \, b_p + 3 \, b_s)}{t^3}} \qquad \text{... (5.25)}$$

$$k_{wo} = \sqrt{\frac{s_w + 2 \, b_d}{s_w + 0{,}5 \, b_d}} \qquad \text{... (5.26)}$$

with:

$$b_d = 2b_p + b_s$$

- for a compression flange with two intermediate stiffeners:

$$l_b = 3{,}65 \sqrt[4]{I_s \, b_1^2 \, (3 \, b_e - 4 \, b_1) / t^3} \qquad \text{... (5.27)}$$

$$k_{wo} = \sqrt{\frac{(2 \, b_e + s_w)(3 \, b_e - 4 \, b_1)}{b_1 \, (4 \, b_e - 6 \, b_1) + s_w \, (3 \, b_e - 4 \, b_1)}} \qquad \text{... (5.28)}$$

(8) The reduced effective area of the stiffener $A_{s,red}$ allowing for distortional buckling (flexural buckling of an intermediate stiffener) should be taken as:

$$A_{s.red} = \chi_d \, A_s \frac{f_{yb} / \gamma_{M0}}{\sigma_{com,ser}} \qquad \text{but } A_{s,red} \leq A_s \qquad \text{... (5.29)}$$

(9) If the webs are unstiffened, the reduction factor χ_d should be obtained directly from $\sigma_{cr,s}$ using the method given in 5.5.3.1(7).

(10) If the webs are also stiffened, the reduction factor χ_d should be obtained using the method given in 5.5.3.1(7), but with the modified elastic critical stress $\sigma_{cr,mod}$ given in 5.5.3.4.4.

(11) In determining effective section properties, the reduced effective area $A_{s,red}$ should be represented by using a reduced thickness $t_{red} = t \, A_{s,red} / A_s$ for all the elements included in A_s.

(12) The effective section properties of the stiffeners at serviceability limit states should be based on the design thickness *t*.

5.5.3.4.3 Webs with up to two intermediate stiffeners

(1) The effective cross-section of the compression zone of a web (or other element of a cross-section that is subject to stress gradient) should be assumed to consist of the reduced effective areas $A_{s,red}$ of up to two intermediate stiffeners, a strip adjacent to the compression flange and a strip adjacent to the centroidal axis of the effective cross-section, see figure 5.12.

(2) The effective cross-section of a web as shown in figure 5.12 should be taken to include:

a) a strip of width $s_{eff,1}$ adjacent to the compression flange;

b) the reduced effective area $A_{s,red}$ of each web stiffener, up to a maximum of two;

c) a strip of width $s_{eff,n}$ adjacent to the effective centroidal axis;

d) the part of the web in tension.

Documento contenuto nel prodotto EUROCODICI edizione 2011. E' vietato l'uso in rete del singolo documento e la sua riproduzione. E' autorizzata la stampa per uso interno.

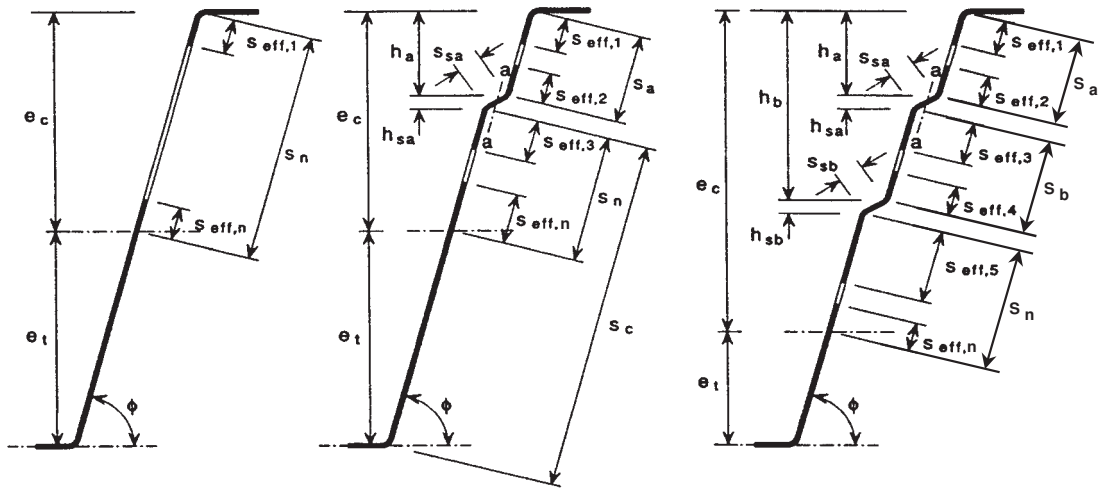

Figure 5.12: Effective cross-sections of webs of trapezoidal profiled sheets

(3) The effective areas of the stiffeners should be obtained from the following:

- for a single stiffener, or for the stiffener closer to the compression flange:

$$A_{sa} = t\,(s_{eff,2} + s_{eff,3} + s_{sa}) \qquad \text{... (5.30)}$$

- for a second stiffener:

$$A_{sb} = t\,(s_{eff,4} + s_{eff,5} + s_{sb}) \qquad \text{... (5.31)}$$

in which the dimensions $s_{eff,1}$ to $s_{eff,n}$ and s_{sa} and s_{sb} are as shown in figure 5.12.

(4) Initially the location of the effective centroidal axis should be based on the effective cross-sections of the flanges but the gross cross-sections of the webs. In this case the basic effective width $s_{eff,0}$ should be obtained from:

$$s_{eff,0} = 0{,}76\,t\,\sqrt{E\,/\,(\gamma_{M0}\,\sigma_{com,Ed})} \qquad \text{... (5.32)}$$

where:

$\sigma_{com,Ed}$ is the stress in the compression flange when the cross-section resistance is reached.

(5) If the web is not fully effective, the dimensions $s_{eff,1}$ to $s_{eff,n}$ should be determined as follows:

$$s_{eff,1} = s_{eff,0} \qquad \text{... (5.33a)}$$

$$s_{eff,2} = (1 + 0{,}5h_a / e_c)\,s_{eff,0} \qquad \text{... (5.33b)}$$

$$s_{eff,3} = [1 + 0{,}5(h_a + h_{sa})/ e_c]\,s_{eff,0} \qquad \text{... (5.33c)}$$

$$s_{eff,4} = (1 + 0{,}5h_b / e_c)\,s_{eff,0} \qquad \text{... (5.33d)}$$

$$s_{eff,5} = [1 + 0{,}5(h_b + h_{sb})/ e_c]\,s_{eff,0} \qquad \text{... (5.33e)}$$

$$s_{eff,n} = 1{,}5 s_{eff,0} \qquad \text{... (5.33f)}$$

where:

e_c is the distance from the effective centroidal axis to the system line of the compression flange, see figure 5.12;

and the dimensions h_a, h_b, h_{sa} and h_{sb} are as shown in figure 5.12.

Documento contenuto nel prodotto EUROCODICI edizione 2011. E' vietato l'uso in rete del singolo documento e la sua riproduzione. E' autorizzata la stampa per uso interno.

(6) The dimensions $s_{\mathrm{eff,1}}$ to $s_{\mathrm{eff,n}}$ should initially be determined from (5) and then revised if the relevant plane element is fully effective, using the following:

- in an unstiffened web, if $s_{\mathrm{eff,1}} + s_{\mathrm{eff,n}} \geq s_{\mathrm{n}}$ the entire web is effective, so revise as follows:

$$s_{\mathrm{eff,1}} = 0{,}4 s_{\mathrm{n}} \qquad \text{... (5.34a)}$$

$$s_{\mathrm{eff,n}} = 0{,}6 s_{\mathrm{n}} \qquad \text{... (5.34b)}$$

- in stiffened web, if $s_{\mathrm{eff,1}} + s_{\mathrm{eff,2}} \geq s_{\mathrm{a}}$ the whole of s_{a} is effective, so revise as follows:

$$s_{\mathrm{eff,1}} = \frac{s_{\mathrm{a}}}{2 + 0{,}5 h_{\mathrm{a}}/e_{\mathrm{c}}} \qquad \text{... (5.35a)}$$

$$s_{\mathrm{eff,2}} = s_{\mathrm{a}} \frac{\left(1 + 0{,}5 h_{\mathrm{a}}/e_{\mathrm{c}}\right)}{2 + 0{,}5 h_{\mathrm{a}}/e_{\mathrm{c}}} \qquad \text{... (5.35b)}$$

- in a web with one stiffener, if $s_{\mathrm{eff,3}} + s_{\mathrm{eff,n}} \geq s_{\mathrm{n}}$ the whole of s_{n} is effective, so revise as follows:

$$s_{\mathrm{eff,3}} = s_{\mathrm{n}} \frac{\left[1 + 0{,}5\left(h_{\mathrm{a}} + h_{\mathrm{sa}}\right)/e_{\mathrm{c}}\right]}{2{,}5 + 0{,}5\left(h_{\mathrm{a}} + h_{\mathrm{sa}}\right)/e_{\mathrm{c}}} \qquad \text{... (5.36a)}$$

$$s_{\mathrm{eff,n}} = \frac{1{,}5 s_{\mathrm{n}}}{2{,}5 + 0{,}5\left(h_{\mathrm{a}} + h_{\mathrm{sa}}\right)/e_{\mathrm{c}}} \qquad \text{... (5.36b)}$$

- in a web with two stiffeners:

  - if $s_{\mathrm{eff,3}} + s_{\mathrm{eff,4}} \geq s_{\mathrm{b}}$ the whole of s_{b} is effective, so revise as follows:

$$s_{\mathrm{eff,3}} = s_{\mathrm{b}} \frac{1 + 0{,}5\left(h_{\mathrm{a}} + h_{\mathrm{sa}}\right)/e_{\mathrm{c}}}{2 + 0{,}5\left(h_{\mathrm{a}} + h_{\mathrm{sa}} + h_{\mathrm{b}}\right)/e_{\mathrm{c}}} \qquad \text{... (5.37a)}$$

$$s_{\mathrm{eff,4}} = s_{\mathrm{b}} \frac{1 + 0{,}5 h_{\mathrm{b}}/e_{\mathrm{c}}}{2 + 0{,}5\left(h_{\mathrm{a}} + h_{\mathrm{sa}} + h_{\mathrm{b}}\right)/e_{\mathrm{c}}} \qquad \text{... (5.37b)}$$

  - if $s_{\mathrm{eff,5}} + s_{\mathrm{eff,n}} \geq s_{\mathrm{n}}$ the whole of s_{n} is effective, so revise as follows:

$$s_{\mathrm{eff,5}} = s_{\mathrm{n}} \frac{1 + 0{,}5\left(h_{\mathrm{b}} + h_{\mathrm{sb}}\right)/e_{\mathrm{c}}}{2{,}5 + 0{,}5\left(h_{\mathrm{b}} + h_{\mathrm{sb}}\right)/e_{\mathrm{c}}} \qquad \text{... (5.38a)}$$

$$s_{\mathrm{eff,n}} = \frac{1{,}5 s_{\mathrm{n}}}{2{,}5 + 0{,}5\left(h_{\mathrm{b}} + h_{\mathrm{sb}}\right)/e_{\mathrm{c}}} \qquad \text{... (5.38b)}$$

Documento contenuto nel prodotto EUROCODICI edizione 2011. E' vietato l'uso in rete del singolo documento e la sua riproduzione. E' autorizzata la stampa per uso interno.

(7) For a single stiffener, or for the stiffener closer to the compression flange in webs with two stiffeners, the elastic critical buckling stress $\sigma_{cr,sa}$ should be determined using:

$$\sigma_{cr,sa} = \frac{1{,}05\ k_f\ E \sqrt{I_s\ t^3\ s_1}}{A_{sa}\ s_2\ (s_1 - s_2)} \qquad \text{... (5.39a)}$$

in which s_1 is given by the following:

- for a single stiffener:

$$s_1 = 0{,}9\,(s_a + s_{sa} + s_c) \qquad \text{... (5.39b)}$$

- for the stiffener closer to the compression flange, in webs with two stiffeners:

$$s_1 = s_a + s_{sa} + s_b + 0{,}5(s_{sb} + s_c) \qquad \text{... (5.39c)}$$

with:

$$s_2 = s_1 - s_a - 0{,}5 s_{sa} \qquad \text{... (5.39d)}$$

where:

k_f is a coefficient that allows for partial rotational restraint of the stiffened web by the flanges;

I_s is the second moment of area of a stiffener cross-section comprising the fold width s_{sa} and two adjacent strips, each of width $s_{eff,1}$, about its own centroidal axis parallel to the plane web elements, see figure 5.13. In calculating I_s the possible difference in slope between the plane web elements on either side of the stiffener may be neglected;

s_c as defined in Figure 5.12.

(8) In the absence of a more detailed investigation, the rotational restraint coefficient k_f may conservatively be taken as equal to 1,0 corresponding to a pin-jointed condition.

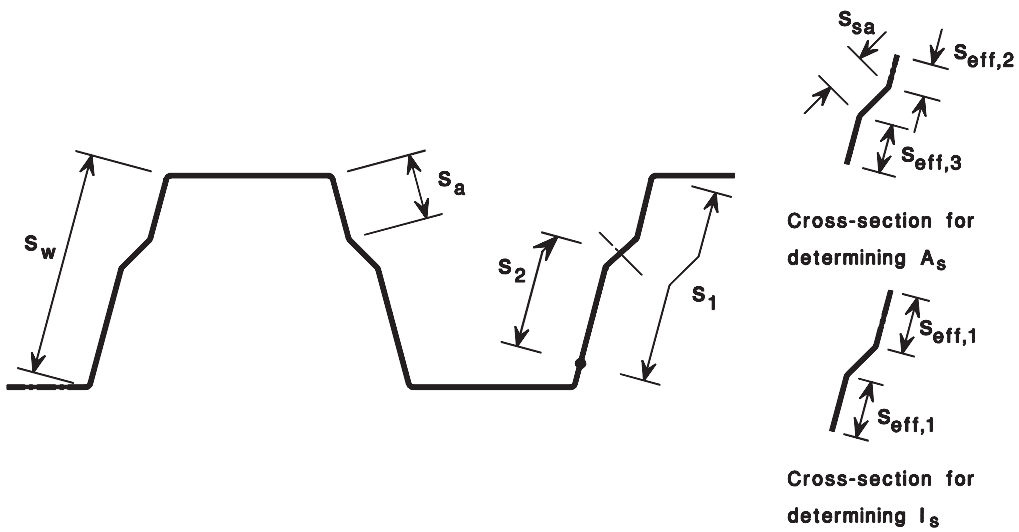

Figure 5.13: Web stiffeners for trapezoidal profiled sheeting

(9) For a single stiffener in compression, or for the stiffener closer to the compression flange in webs with two stiffeners, the reduced effective area $A_{sa,red}$ should be determined from:

$$A_{sa,red} = \frac{\chi_d\ A_{sa}}{1 - (h_a + 0{,}5 h_{sa})/e_c} \quad \text{but } A_{sa,red} \le A_{sa} \qquad \text{... (5.40)}$$

Documento contenuto nel prodotto EUROCODICI edizione 2011. E' vietato l'uso in rete del singolo documento e la sua riproduzione. E' autorizzata la stampa per uso interno.

(10) If the flanges are unstiffened, the reduction factor χ_d should be obtained directly from $\sigma_{cr,sa}$ using the method given in 5.5.3.1(7).

(11) If the flanges are also stiffened, the reduction factor χ_d should be obtained using the method given in 5.5.3.1(7), but with the modified elastic critical stress $\sigma_{cr,mod}$ given in 5.5.3.4.4.

(12) For a single stiffener in tension, the reduced effective area $A_{sa,red}$ should be taken as equal to A_{sa}.

(13) For webs with two stiffeners, the reduced effective area $A_{sb,red}$ for the second stiffener, should be taken as equal to A_{sb}.

(14) In determining effective section properties, the reduced effective area $A_{sa,red}$ should be represented by using a reduced thickness $t_{red} = \chi_d t$ for all the elements included in A_{sa}.

(15) The effective section properties of the stiffeners at serviceability limit states should be based on the design thickness *t*.

(16) Optionally, the effective section properties may be refined iteratively by basing the location of the effective centroidal axis on the effective cross-sections of the webs determined by the previous iteration and the effective cross-sections of the flanges determined using the reduced thickness t_{red} for all the elements included in the flange stiffener areas A_s. This iteration should be based on an increased basic effective width $s_{eff,0}$ obtained from:

$$s_{eff,0} = 0{,}95\, t \sqrt{\frac{E}{\gamma_{M0}\, \sigma_{com,Ed}}} \qquad \text{... (5.41)}$$

5.5.3.4.4 Sheeting with flange stiffeners and web stiffeners

(1) In the case of sheeting with intermediate stiffeners in the flanges and in the webs, see figure 5.14, interaction between the distorsional buckling (flexural buckling of the flange stiffeners and the web stiffeners) should be allowed for by using a modified elastic critical stress $\sigma_{cr,mod}$ for both types of stiffeners, obtained from:

$$\sigma_{cr,mod} = \frac{\sigma_{cr,s}}{\sqrt[4]{1 + \left[\beta_s \dfrac{\sigma_{cr,s}}{\sigma_{cr,sa}}\right]^4}} \qquad \text{... (5.42)}$$

where:

$\sigma_{cr,s}$ is the elastic critical stress for an intermediate flange stiffener, see 5.5.3.4.2(2) for a flange with a single stiffener or 5.5.3.4.2(3) for a flange with two stiffeners;

$\sigma_{cr,sa}$ is the elastic critical stress for a single web stiffener, or the stiffener closer to the compression flange in webs with two stiffeners, see 5.5.3.4.3(7);

A_s is the effective cross-section area of an intermediate flange stiffener;

A_{sa} is the effective cross-section area of an intermediate web stiffener;

β_s = $1 - (h_a + 0{,}5\, h_{ha}) / e_c$ for a profile in bending;

β_s = 1 for a profile in axial compression.

Documento contenuto nel prodotto EUROCODICI edizione 2011. E' vietato l'uso in rete del singolo documento e la sua riproduzione. E' autorizzata la stampa per uso interno.

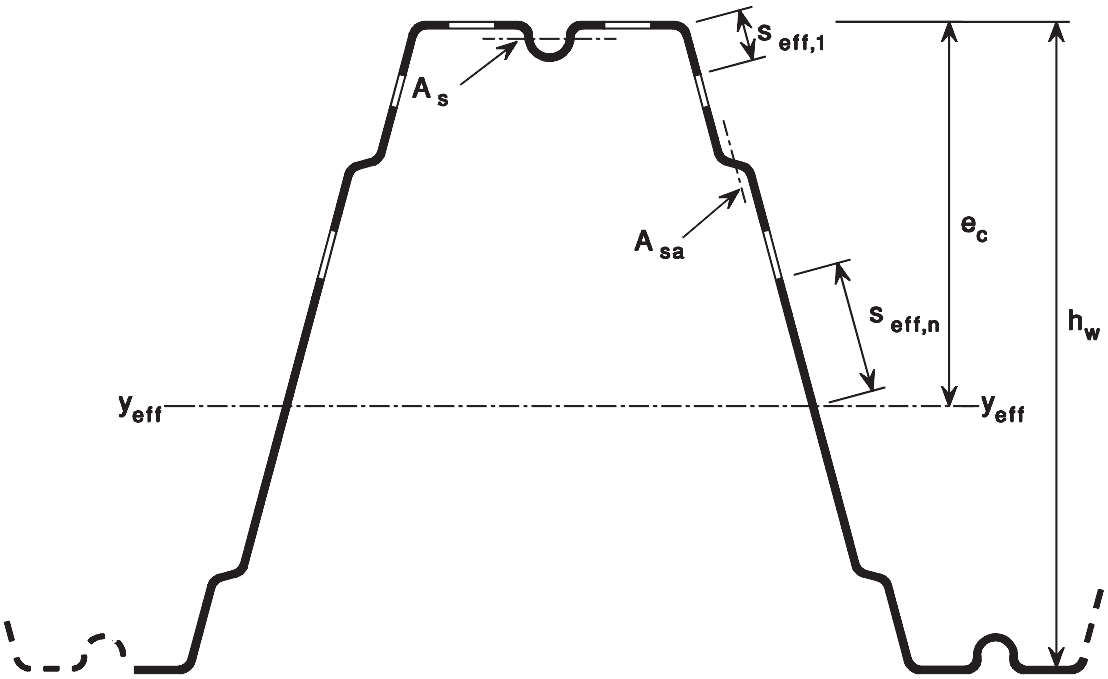

Figure 5.14: Trapezoidal profiled sheeting with flange stiffeners and web stiffeners

5.6 Plate buckling between fasteners

(1) Plate buckling between fasteners should be checked for elements composed of plates and mechanical fasteners, see Table 3.3 of EN 1993-1-8.

6 Ultimate limit states

6.1 Resistance of cross-sections

6.1.1 General

(1) Design assisted by testing may be used instead of design by calculation for any of these resistances.

NOTE: Design assisted by testing is particularly likely to be beneficial for cross-sections with relatively high b_p / t ratios, e.g. in relation to inelastic behaviour, web crippling or shear lag.

(2) For design by calculation, the effects of local buckling should be taken into account by using effective section properties determined as specified in Section 5.5.

(3) The buckling resistance of members should be verified as specified in Section 6.2.

(4) In members with cross-sections that are susceptible to cross-sectional distortion, account should be taken of possible lateral buckling of compression flanges and lateral bending of flanges generally, see 5.5, and 10.1.

Documento contenuto nel prodotto EUROCODICI edizione 2011. E' vietato l'uso in rete del singolo documento e la sua riproduzione. E' autorizzata la stampa per uso interno.

6.1.2 Axial tension

(1) The design resistance of a cross-section for uniform tension $N_{t,Rd}$ should be determined from:

$$N_{t,Rd} = \frac{f_{ya} A_g}{\gamma_{M0}} \quad \text{but} \quad N_{t,Rd} \leq F_{n,Rd} \qquad \text{... (6.1)}$$

where:

A_g is the gross area of the cross-section;

$F_{n,Rd}$ is the net-section resistance from 8.4 for the appropriate type of mechanical fastener;

f_{ya} is the average yield strength, see 3.2.3.

(2) The design resistance of an angle for uniform tension connected through one leg, or other types of section connected through outstands, should be determined as specified in EN 1993-1-8, 3.6.3.

6.1.3 Axial compression

(1) The design resistance of a cross-section for compression $N_{c,Rd}$ should be determined from:

- if the effective area A_{eff} is less than the gross area A_g (section with reduction due to local and/or distortional buckling)

$$N_{c,Rd} = A_{eff} f_{yb} / \gamma_{M0} \qquad \text{…(6.2)}$$

- if the effective area A_{eff} is equal to the gross area A_g (section with no reduction due to local or distortional buckling)

$$N_{c,Rd} = A_g \left(f_{yb} + (f_{ya} - f_{yb}) 4 (1 - \bar{\lambda}_e / \bar{\lambda}_{e0})\right) / \gamma_{M0} \text{ but not more than } A_g f_{ya} / \gamma_{M0} \qquad \text{…(6.3)}$$

where

A_{eff} is the effective area of the cross-section, obtained from Section 5.5 by assuming a uniform compressive stress equal to f_{yb};

f_{ya} is the average yield strength, see 3.2.2;

f_{yb} is the basic yield strength.;

$\bar{\lambda}_{e\,max}$ is the relative slenderness of the element which corresponds to the largest value of $\bar{\lambda}_e / \bar{\lambda}_{e0}$;

For plane elements $\bar{\lambda}_e = \bar{\lambda}_p$ and $\bar{\lambda}_{e0} = 0{,}673$, see 5.5.2;

For stiffened elements $\bar{\lambda}_e = \bar{\lambda}_d$ and $\bar{\lambda}_{e0} = 0{,}65$, see 5.5.3.

(2) The internal axial force in a member should be taken as acting at the centroid of its gross cross-section. This is a conservative assumption, but may be used without further analysis. Further analysis may give a more realistic situation of the internal forces for instance in case of uniformly building-up of normal force in the compression element.

(3) The design compression resistance of a cross-section refers to the axial load acting at the centroid of its effective cross-section. If this does not coincide with the centroid of its gross cross-section, the shift e_N of the centroidal axes (see figure 6.1) should be taken into account, using the method given in 6.1.9. When the shift of the neutral axis gives a favourable result in the stress check, then that shift should be neglected only if the shift has been calculated at yield strength and not with the actual compressive stresses.

Documento contenuto nel prodotto EUROCODICI edizione 2011. E' vietato l'uso in rete del singolo documento e la sua riproduzione. E' autorizzata la stampa per uso interno.

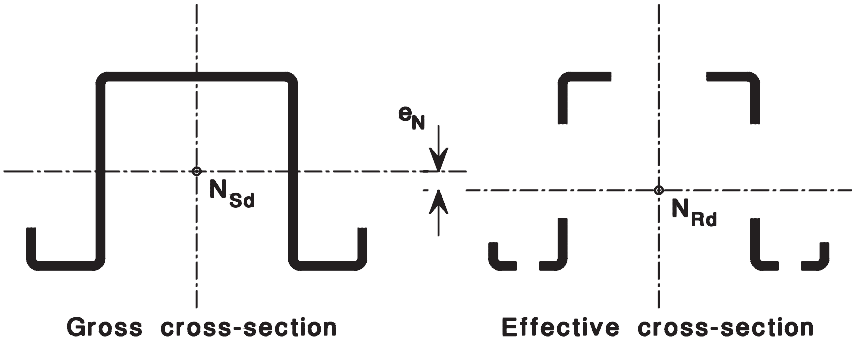

Figure 6.1: Effective cross-section under compression

6.1.4 Bending moment

6.1.4.1 Elastic and elastic-plastic resistance with yielding at the compressed flange

(1) The design moment resistance of a cross-section for bending about one principal axis $M_{c,Rd}$ is determined as follows (see figure 6.2):

- if the effective section modulus W_{eff} is less than the gross elastic section modulus W_{el}

$$M_{c,Rd} = W_{eff} f_{yb} / \gamma_{M0} \qquad ...(6.4)$$

- if the effective section modulus W_{eff} is equal to the gross elastic section modulus W_{el}

$$M_{c,Rd} = f_{yb}\left(W_{el} + (W_{pl} - W_{el})4(1 - \bar{\lambda}_{e\,max} / \bar{\lambda}_{e0})\right) / \gamma_{M0} \text{ but not more than } W_{pl} f_{yb} / \gamma_{M0} \qquad ...(6.5)$$

where

$\bar{\lambda}_{e\,max}$ is the slenderness of the element which correspond to the largest value of $\bar{\lambda}_e / \bar{\lambda}_{e0}$;

For double supported plane elements $\bar{\lambda}_e = \bar{\lambda}_p$ and $\bar{\lambda}_{e0} = 0{,}5 + \sqrt{0{,}25 - 0{,}055(3+\psi)}$ where ψ is the stress ratio, see 5.5.2;

For outstand elements $\bar{\lambda}_e = \bar{\lambda}_p$ and $\bar{\lambda}_{e0} = 0{,}673$, see 5.5.2;

For stiffened elements $\bar{\lambda}_e = \bar{\lambda}_d$ and $\bar{\lambda}_{e0} = 0{,}65$, see 5.5.3.

The resulting bending moment resistance as a function of a decisive element is illustrated in the figure 6.2.

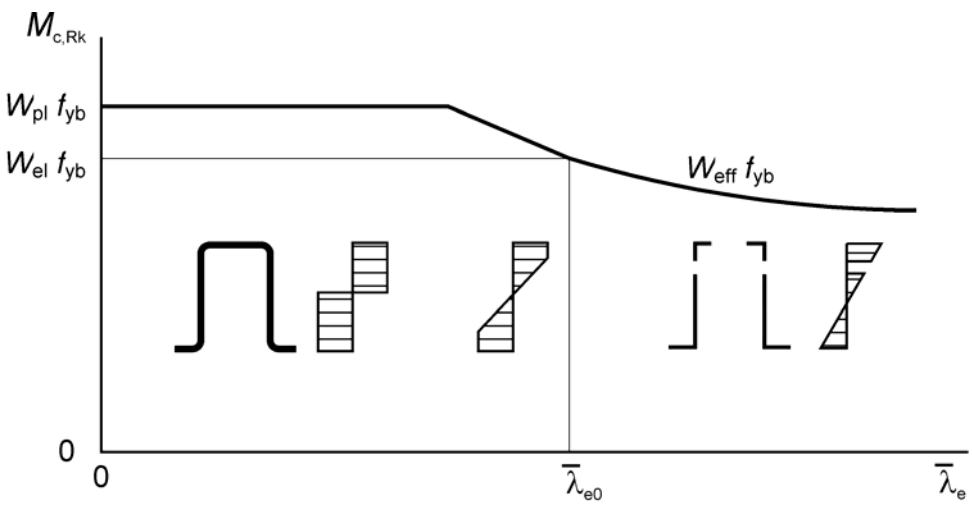

Figure 6.2: Bending moment resistance as a function of slenderness

Documento contenuto nel prodotto EUROCODICI edizione 2011. E' vietato l'uso in rete del singolo documento e la sua riproduzione. E' autorizzata la stampa per uso interno.

(2) Expression (6.5) is applicable provided that the following conditions are satisfied:

a) Bending moment is applied only about one principal axes of the cross-section;

b) The member is not subject to torsion or to torsional, torsional flexural or lateral-torsional or distortional buckling;

c) The angle ϕ between the web (see figure 6.5) and the flange is larger than 60°.

(3) If (2) is not fulfilled the following expression may be used:

$$M_{c,Rd} = W_{el} f_{ya} / \gamma_{M0} \qquad \ldots(6.6)$$

(4) The effective section modulus W_{eff} should be based on an effective cross-section that is subject only to bending moment about the relevant principal axis, with a maximum stress $\sigma_{max,Ed}$ equal to f_{yb} / γ_{M0}, allowing for the effects of local and distortional buckling as specified in Section 5.5. Where shear lag is relevant, allowance should also be made for its effects.

(5) The stress ratio $\psi = \sigma_2 / \sigma_1$ used to determine the effective portions of the web may be obtained by using the effective area of the compression flange but the gross area of the web, see figure 6.3.

(6) If yielding occurs first at the compression edge of the cross-section, unless the conditions given in 6.1.4.2 are met the value of W_{eff} should be based on a linear distribution of stress across the cross-section.

(7) For biaxial bending the following criterion may be used:

$$\frac{M_{y,Ed}}{M_{cy,Rd}} + \frac{M_{z,Ed}}{M_{cz,Rd}} \leq 1 \qquad \ldots (6.7)$$

where:

$M_{y,Ed}$ is the bending moment about the major main axis;

$M_{z,Ed}$ is the bending moment about the minor main axis;

$M_{cy,Rd}$ is the resistance of the cross-section if subject only to moment about the main y – y axis;

$M_{cz,Rd}$ is the resistance of the cross-section if subject only to moment about the main z – z axis.

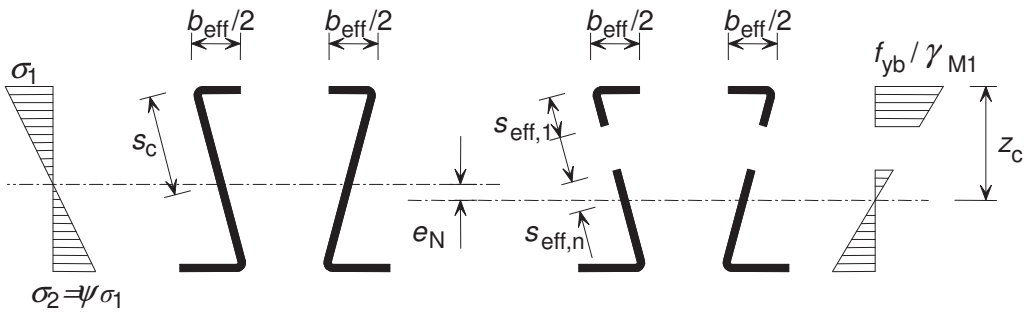

Figure 6.3: Effective cross-section for resistance to bending moments

(8) If redistribution of bending moments is assumed in the global analysis, it should be demonstrated from the results of tests in accordance with Section 9 that the provisions given in 7.2 are satisfied.

6.1.4.2 Elastic and elastic-plastic resistance with yielding at the tension flange only

(1) Provided that bending moment is applied only about one principal axis of the cross-section, and provided that yielding occurs first at the tension edge, plastic reserves in the tension zone may be utilised without any strain limit until the maximum compressive stress $\sigma_{com,Ed}$ reaches f_{yb} / γ_{M0}. In this clause only the bending case is considered. For axial load and bending the clause 6.1.8 or 6.1.9 should be applied.

(2) In this case, the effective partially plastic section modulus $W_{pp,eff}$ should be based on a stress distribution that is bilinear in the tension zone but linear in the compression zone.

Documento contenuto nel prodotto EUROCODICI edizione 2011. E' vietato l'uso in rete del singolo documento e la sua riproduzione. E' autorizzata la stampa per uso interno.

(3) In the absence of a more detailed analysis, the effective width b_{eff} of an element subject to stress gradient may be obtained using 5.5.2 by basing b_c on the bilinear stress distribution (see figure 6.4), by assuming $\psi = -1$.

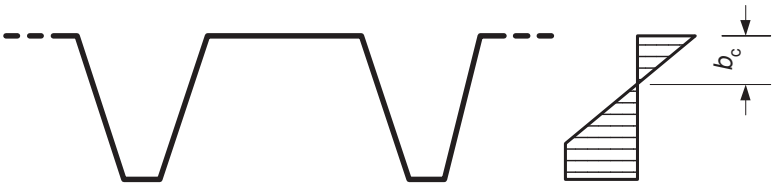

Figure 6.4: Measure b_c for determination of effective width

(4) If redistribution of bending moments is assumed in the global analysis, it should be demonstrated from the results of tests in accordance with Section 9 that the provisions given in 7.2 are satisfied.

6.1.4.3 Effects of shear lag

(1) The effects of shear lag should be taken into account according to EN 1993-1-5.

6.1.5 Shear force

(1) The design shear resistance $V_{b,Rd}$ should be determined from:

$$V_{b,Rd} = \frac{\frac{h_w}{\sin\phi} t f_{bv}}{\gamma_{M0}} \qquad \text{... (6.8)}$$

where:

f_{bv} is the shear strength considering buckling according to Table 6.1;

h_w is the web height between the midlines of the flanges, see figure 5.1(c);

ϕ is the slope of the web relative to the flanges, see figure 6.5.

Table 6.1: Shear buckling strength f_{bv}

Relative web slenderness	Web without stiffening at the support	Web with stiffening at the support [1)]
$\bar{\lambda}_w \le 0{,}83$	$0{,}58 f_{yb}$	$0{,}58 f_{yb}$
$0{,}83 < \bar{\lambda}_w < 1{,}40$	$0{,}48 f_{yb} / \bar{\lambda}_w$	$0{,}48 f_{yb} / \bar{\lambda}_w$
$\bar{\lambda}_w \ge 1{,}40$	$0{,}67 f_{yb} / \bar{\lambda}_w^2$	$0{,}48 f_{yb} / \bar{\lambda}_w$

[1)] Stiffening at the support, such as cleats, arranged to prevent distortion of the web and designed to resist the support reaction.

Documento contenuto nel prodotto EUROCODICI edizione 2011. E' vietato l'uso in rete del singolo documento e la sua riproduzione. E' autorizzata la stampa per uso interno.

(2) The relative web slenderness $\bar{\lambda}_w$ should be obtained from the following:

- for webs without longitudinal stiffeners:

$$\bar{\lambda}_w = 0{,}346 \frac{s_w}{t} \sqrt{\frac{f_{yb}}{E}} \qquad \text{... (6.10a)}$$

- for webs with longitudinal stiffeners, see figure 6.5:

$$\bar{\lambda}_w = 0{,}346 \frac{s_d}{t} \sqrt{\frac{5{,}34}{k_\tau} \frac{f_{yb}}{E}} \quad \text{but} \quad \bar{\lambda}_w \geq 0{,}346 \frac{s_p}{t} \sqrt{\frac{f_{yb}}{E}} \qquad \text{... (6.10b)}$$

with:

$$k_\tau = 5{,}34 + \frac{2{,}10}{t} \left(\frac{\Sigma I_s}{s_d} \right)^{1/3}$$

where:

I_s is the second moment of area of the individual longitudinal stiffener as defined in 5.5.3.4.3(7), about the axis a – a as indicated in figure 6.5;

s_d is the total developed slant height of the web, as indicated in figure 6.5;

s_p is the slant height of the largest plane element in the web, see figure 6.5;

s_w is the slant height of the web, as shown in figure 6.5, between the midpoints of the corners, these points are the median points of the corners, see figure 5.1(c).

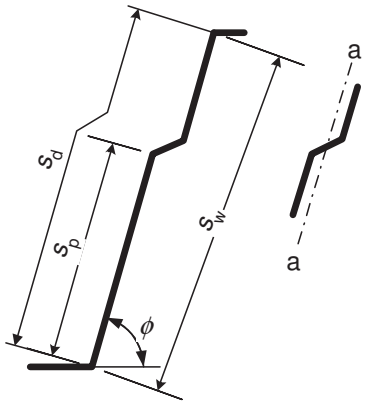

Figure 6.5: Longitudinally stiffened web

6.1.6 Torsional moment

(1) Where loads are applied eccentric to the shear centre of the cross-section, the effects of torsion should be taken into account.

(2) The centroidal axis and shear centre and imposed rotation centre to be used in determining the effects of the torsional moment, should be taken as those of the gross cross-section.

(3) The direct stresses due to the axial force N_{Ed} and the bending moments $M_{y,Ed}$ and $M_{z,Ed}$ should be based on the respective effective cross-sections used in 6.1.2 to 6.1.4. The shear stresses due to transverse shear forces, the shear stress due to uniform (St. Venant) torsion and the direct stresses and shear stresses due to warping, should all be based on the properties of the gross cross-section.

Documento contenuto nel prodotto EUROCODICI edizione 2011. E' vietato l'uso in rete del singolo documento e la sua riproduzione. E' autorizzata la stampa per uso interno.

(4) In cross-sections subject to torsion, the following conditions should be satisfied (average yield strength is allowed here, see 3.2.2):

$$\sigma_{tot,Ed} \leq f_{ya} / \gamma_{M0} \quad \text{... (6.11a)}$$

$$\tau_{tot,Ed} \leq \frac{f_{ya} / \sqrt{3}}{\gamma_{M0}} \quad \text{... (6.11b)}$$

$$\sqrt{\sigma_{tot,Ed}^2 + 3\tau_{tot,Ed}^2} \leq 1{,}1\frac{f_{ya}}{\gamma_{M0}} \quad \text{... (6.11c)}$$

where:

$\sigma_{tot,Ed}$ is the design total direct stress, calculated on the relevant effective cross-section;

$\tau_{tot,Ed}$ is the design total shear stress, calculated on the gross cross-section.

(5) The total direct stress $\sigma_{tot,Ed}$ and the total shear stress $\tau_{tot,Ed}$ should by obtained from:

$$\sigma_{tot,Ed} = \sigma_{N,Ed} + \sigma_{My,Ed} + \sigma_{Mz,Ed} + \sigma_{w,Ed} \quad \text{... (6.12a)}$$

$$\tau_{tot,Ed} = \tau_{Vy,Ed} + \tau_{Vz,Ed} + \tau_{t,Ed} + \tau_{w,Ed} \quad \text{... (6.12b)}$$

where:

$\sigma_{My,Ed}$ is the design direct stress due to the bending moment $M_{y,Ed}$ (using effective cross-section);

$\sigma_{Mz,Ed}$ is the design direct stress due to the bending moment $M_{z,Ed}$ (using effective cross-section);

$\sigma_{N,Ed}$ is the design direct stress due to the axial force N_{Ed} (using effective cross-section);

$\sigma_{w,Ed}$ is the design direct stress due to warping (using gross cross-section);

$\tau_{Vy,Ed}$ is the design shear stress due to the transverse shear force $V_{y,Ed}$ (using gross cross-section);

$\tau_{Vz,Ed}$ is the design shear stress due to the transverse shear force $V_{z,Ed}$ (using gross cross-section);

$\tau_{t,Ed}$ is the design shear stress due to uniform (St. Venant) torsion (using gross cross-section);

$\tau_{w,Ed}$ is the design shear stress due to warping (using gross cross-section).

6.1.7 Local transverse forces

6.1.7.1 General

(1)P To avoid crushing, crippling or buckling in a web subject to a support reaction or other local transverse force applied through the flange, the transverse force F_{Ed} shall satisfy:

$$F_{Ed} \leq R_{w,Rd} \quad \text{... (6.13)}$$

where:

$R_{w,Rd}$ is the local transverse resistance of the web.

(2) The local transverse resistance of a web $R_{w,Rd}$ should be obtained as follows:

a) for an unstiffened web:

- for a cross-section with a single web: from 6.1.7.2;
- for any other case, including sheeting: from 6.1.7.3;

b) for a stiffened web: from 6.1.7.4.

(3) Where the local load or support reaction is applied through a cleat that is arranged to prevent distortion of the web and is designed to resist the local transverse force, the local resistance of the web to the transverse force need not be considered.

(4) In beams with I-shaped cross-sections built up from two channels, or with similar cross-sections in which two components are interconnected through their webs, the connections between the webs should be located as close as practicable to the flanges of the beam.

Documento contenuto nel prodotto EUROCODICI edizione 2011. E' vietato l'uso in rete del singolo documento e la sua riproduzione. E' autorizzata la stampa per uso interno.

6.1.7.2 Cross-sections with a single unstiffened web

(1) For a cross-section with a single unstiffened web, see figure 6.6, the local transverse resistance of the web may be determined as specified in (2), provided that the cross-section satisfies the following criteria:

$$h_w / t \leq 200 \quad \text{... (6.14a)}$$

$$r / t \leq 6 \quad \text{... (6.14b)}$$

$$45° \leq \phi \leq 90° \quad \text{... (6.14c)}$$

where:

h_w is the web height between the midlines of the flanges;

r is the internal radius of the corners;

ϕ is the angle of the web relative to the flanges [degrees].

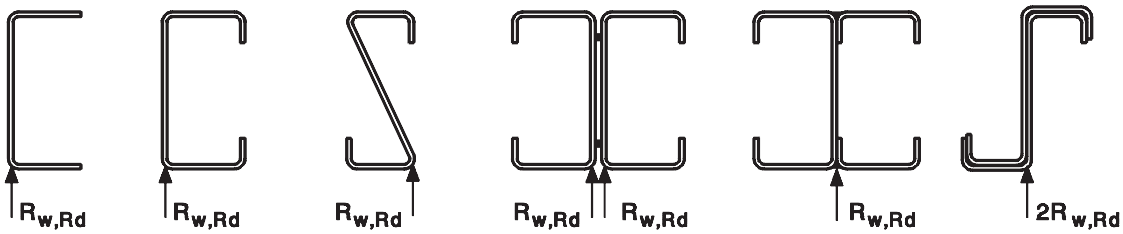

Figure 6.6: Examples of cross-sections with a single web

(2) For cross-sections that satisfy the criteria specified in (1), the local transverse resistance of a web $R_{w,Rd}$ may be determined as shown if figure 6.7.

(3) The values of the coefficients k_1 to k_5 should be determined as follows:

$k_1 = 1{,}33 - 0{,}33\,k$

$k_2 = 1{,}15 - 0{,}15\,r/t$ but $k_2 \geq 0{,}50$ and $k_2 \leq 1{,}0$

$k_3 = 0{,}7 + 0{,}3\,(\phi / 90)^2$

$k_4 = 1{,}22 - 0{,}22\,k$

$k_5 = 1{,}06 - 0{,}06\,r/t$ but $k_5 \leq 1{,}0$

where:

$k = f_{yb} / 228$ [with f_{yb} in N/mm^2].

Documento contenuto nel prodotto EUROCODICI edizione 2011. E' vietato l'uso in rete del singolo documento e la sua riproduzione. E' autorizzata la stampa per uso interno.

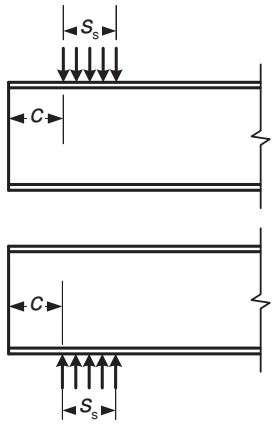

a) For a single local load or support reaction

i) $c \leq 1{,}5\, h_w$ clear from a free end:

- for a cross-section with stiffened flanges:

$$R_{w,Rd} = \frac{k_1 k_2 k_3 \left[9{,}04 - \frac{h_w/t}{60}\right]\left[1 + 0{,}01\frac{s_s}{t}\right] t^2 f_{yb}}{\gamma_{M1}} \qquad (6.15a)$$

- for a cross-section with unstiffened flanges:

- if $s_s/t \leq 60$:

$$R_{w,Rd} = \frac{k_1 k_2 k_3 \left[5{,}92 - \frac{h_w/t}{132}\right]\left[1 + 0{,}01\frac{s_s}{t}\right] t^2 f_{yb}}{\gamma_{M1}} \qquad (6.15b)$$

- if $s_s/t > 60$:

$$R_{w,Rd} = \frac{k_1 k_2 k_3 \left[5{,}92 - \frac{h_w/t}{132}\right]\left[0{,}71 + 0{,}015\frac{s_s}{t}\right] t^2 f_{yb}}{\gamma_{M1}} \qquad (6.15c)$$

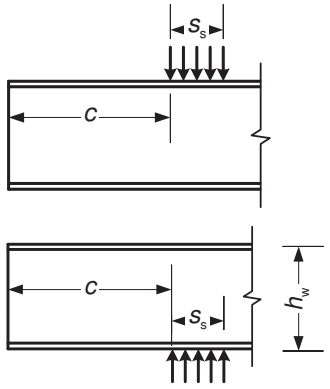

ii) $c > 1{,}5\, h_w$ clear from a free end:

- if $s_s/t \leq 60$:

$$R_{w,Rd} = \frac{k_3 k_4 k_5 \left[14{,}7 - \frac{h_w/t}{49{,}5}\right]\left[1 + 0{,}007\frac{s_s}{t}\right] t^2 f_{yb}}{\gamma_{M1}} \qquad (6.15d)$$

- if $s_s/t > 60$:

$$R_{w,Rd} = \frac{k_3 k_4 k_5 \left[14{,}7 - \frac{h_w/t}{49{,}5}\right]\left[0{,}75 + 0{,}011\frac{s_s}{t}\right] t^2 f_{yb}}{\gamma_{M1}} \qquad (6.15e)$$

Figure 6.7a) : Local loads and supports — cross-sections with a single web

Documento contenuto nel prodotto EUROCODICI edizione 2011. E' vietato l'uso in rete del singolo documento e la sua riproduzione. E' autorizzata la stampa per uso interno.

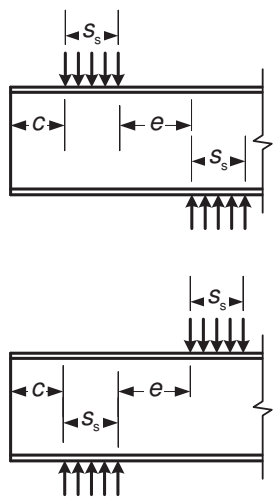	b) For two opposing local transverse forces closer together than $1{,}5\ h_w$: i) $c \le 1{,}5\ h_w$ clear from a free end: $$R_{w,Rd} = \frac{k_1 k_2 k_3 \left[6{,}66 - \frac{h_w/t}{64}\right]\left[1 + 0{,}01\frac{s_s}{t}\right] t^2 f_{yb}}{\gamma_{M1}} \quad (6.15f)$$
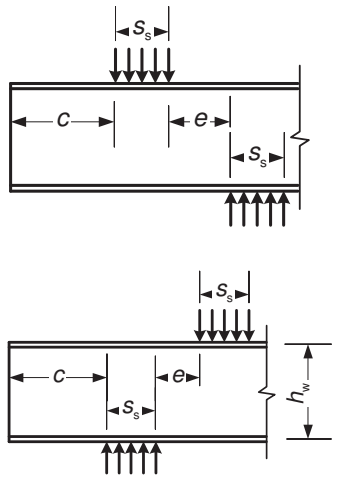	ii) $c > 1{,}5\ h_w$ clear from a free end: $$R_{w,Rd} = \frac{k_3 k_4 k_5 \left[21{,}0 - \frac{h_w/t}{16{,}3}\right]\left[1 + 0{,}0013\frac{s_s}{t}\right] t^2 f_{yb}}{\gamma_{M1}} \quad (6.15g)$$

Figure 6.7b): Local loads and supports — cross-sections with a single web

(4) If the web rotation is prevented either by suitable restraint or because of the section geometry (e.g. I-beams, see fourth and fifth from the left in the figure 6.6) then the local transverse resistance of a web $R_{w,Rd}$ may be determined as follows:

a) for a single load or support reaction

i) $c < 1{,}5\ h_w$ (near or at free end)

for a cross-section of stiffened and unstiffened flanges

$$R_{w,Rd} = \frac{k_7 \left[8{,}8 + 1{,}1\sqrt{\frac{s_s}{t}}\right] t^2 f_{yb}}{\gamma_{M1}} \quad \ldots (6.16a)$$

ii) $c > 1{,}5\ h_w$ (far from free end)

for a cross-section of stiffened and unstiffened flanges

$$R_{w,Rd} = \frac{k_5^* k_6 \left[13{,}2 + 2{,}87\sqrt{\frac{s_s}{t}}\right] t^2 f_{yb}}{\gamma_{M1}} \quad \ldots (6.16b)$$

b) for opposite loads or reactions

i) $c < 1{,}5\ h_w$ (near or at free end)

Documento contenuto nel prodotto EUROCODICI edizione 2011. E' vietato l'uso in rete del singolo documento e la sua riproduzione. E' autorizzata la stampa per uso interno.

for a cross-section of stiffened and unstiffened flanges

$$R_{w,Rd} = \frac{k_{10} k_{11} \left[8{,}8 + 1{,}1 \sqrt{\frac{s_s}{t}} \right] t^2 f_{yb}}{\gamma_{M1}} \qquad \ldots (6.16c)$$

ii) $c > 1{,}5\, h_w$ (loads or reactions far from free end)

for a cross-section of stiffened and unstiffened flanges

$$R_{w,Rd} = \frac{k_8 k_9 \left[13{,}2 + 2{,}87 \sqrt{\frac{s_s}{t}} \right] t^2 f_{yb}}{\gamma_{M1}} \qquad \ldots (6.16d)$$

Where the values of coefficients k_5^* to k_{11} should be determined as follows:

$k_5^* = 1{,}49 - 0{,}53\, k$ but $k_5^* \geq 0{,}6$

$k_6 = 0{,}88 - 0{,}12\, t / 1{,}9$

$k_7 = 1 + s_s / t / 750$ if $s_s / t < 150$; $k_7 = 1{,}20$ if $s_s / t > 150$

$k_8 = 1 / k$ if $s_s / t < 66{,}5$; $k_8 = (1{,}10 - s_s / t / 665) / k$ if $s_s / t > 66{,}5$

$k_9 = 0{,}82 + 0{,}15\, t / 1{,}9$

$k_{10} = (0{,}98 - s_s / t / 865) / k$

$k_{11} = 0{,}64 + 0{,}31\, t / 1{,}9$

where:

$k = f_{yb} / 228$ [with f_{yb} in N/mm^2];

s_s is the nominal length of stiff bearing.

In the case of two equal and opposite local transverse forces distributed over unequal bearing lengths, the smaller value of s_s should be used.

6.1.7.3 Cross-sections with two or more unstiffened webs

(1) In cross-sections with two or more webs, including sheeting, see figure 6.8, the local transverse resistance of an unstiffened web should be determined as specified in (2), provided that both of the following conditions are satisfied:

- the clear distance c from the bearing length for the support reaction or local load to a free end, see figure 6.9, is at least 40 mm;
- the cross-section satisfies the following criteria:

$r/t \leq 10$ ... (6.17a)

$h_w/t \leq 200 \sin \phi$ ... (6.17b)

$45° \leq \phi \leq 90°$ ... (6.17c)

where:

h_w is the web height between the midlines of the flanges;

r is the internal radius of the corners;

ϕ is the angle of the web relative to the flanges [degrees].

Documento contenuto nel prodotto EUROCODICI edizione 2011. E' vietato l'uso in rete del singolo documento e la sua riproduzione. E' autorizzata la stampa per uso interno.

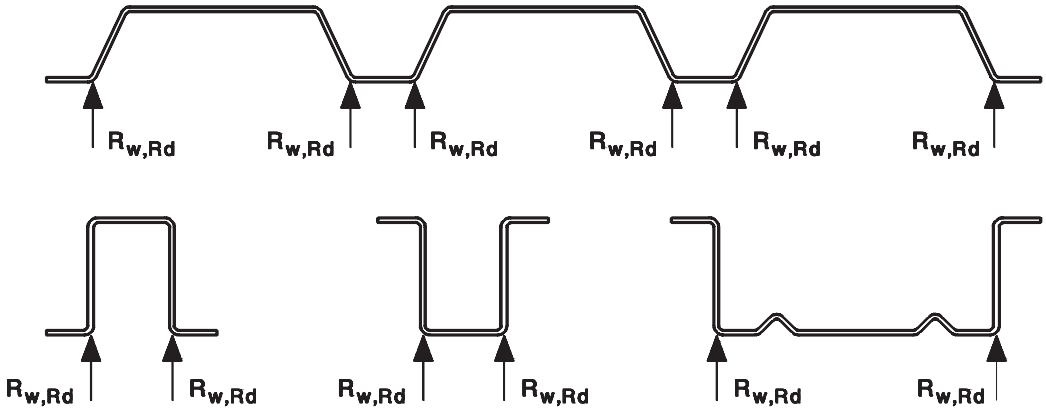

Figure 6.8: Examples of cross-sections with two or more webs

(2) Where both of the conditions specified in (1) are satisfied, the local transverse resistance $R_{w,Rd}$ per web of the cross-section should be determined from

$$R_{w,Rd} = \alpha t^2 \sqrt{f_{yb} E} \left(1 - 0{,}1\sqrt{r/t}\right)\left[0{,}5 + \sqrt{0{,}02\, l_a / t}\right]\left(2{,}4 + (\phi/90)^2\right)/\gamma_{M1} \qquad \text{... (6.18)}$$

where:

l_a is the effective bearing length for the relevant category, see (3);

α is the coefficient for the relevant category, see (3).

(3) The values of l_a and α should be obtained from (4) and (5) respectively. The maximum design value for l_a = 200 mm. When the support is a cold-formed section with one web or round tube, for s_s should be taken a value of 10 mm. The relevant category (1 or 2) should be based on the clear distance e between the local load and the nearest support, or the clear distance c from the support reaction or local load to a free end, see figure 6.9.

(4) The value of the effective bearing length l_a should be obtained from the following:

a) for Category 1: $l_a = 10$ mm ... (6.19a)

b) for Category 2:

- $\beta_V \leq 0{,}2$: $l_a = s_s$ ... (6.19b)
- $\beta_V \geq 0{,}3$: $l_a = 10$ mm ... (6.19c)
- $0{,}2 < \beta_V < 0{,}3$: Interpolate linearly between the values of l_a for 0,2 and 0,3

with:

$$\beta_v = \frac{|V_{Ed,1}| - |V_{Ed,2}|}{|V_{Ed,1}| + |V_{Ed,2}|}$$

in which $|V_{Ed,1}|$ and $|V_{Ed,2}|$ are the absolute values of the transverse shear forces on each side of the local load or support reaction, and $|V_{Ed,1}| \geq |V_{Ed,2}|$ and s_s is the length of stiff bearing.

(5) The value of the coefficent α should be obtained from the following:

a) for Category 1:

- for sheeting profiles: $\alpha = 0{,}075$ ... (6.20a)
- for liner trays and hat sections: $\alpha = 0{,}057$ ... (6.20b)

b) for Category 2:

- for sheeting profiles: $\alpha = 0{,}15$ ... (6.20c)
- for liner trays and hat sections: $\alpha = 0{,}115$ ... (6.20d)

Documento contenuto nel prodotto EUROCODICI edizione 2011. E' vietato l'uso in rete del singolo documento e la sua riproduzione. E' autorizzata la stampa per uso interno.

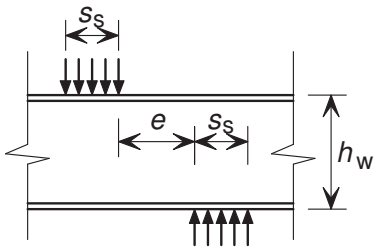	Category 1 - local load applied with $e \leq 1{,}5\ h_w$ clear from the nearest support;
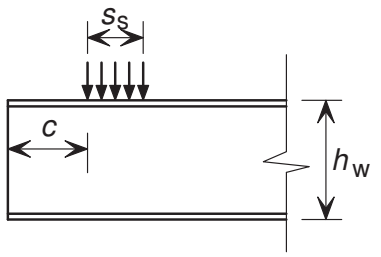	Category 1 - local load applied with $c \leq 1{,}5\ h_w$ clear from a free end;
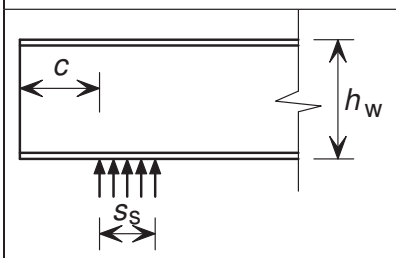	Category 1 - reaction at end support with $c \leq 1{,}5\ h_w$ clear from a free end.
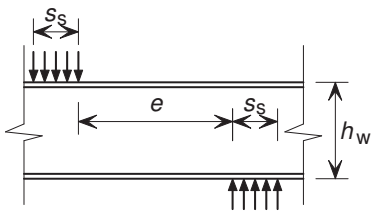	Category 2 - local load applied with $e > 1{,}5\ h_w$ clear from the nearest support;
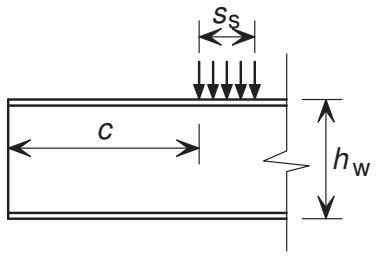	Category 2 - local load applied with $c > 1{,}5\ h_w$ clear from a free end;
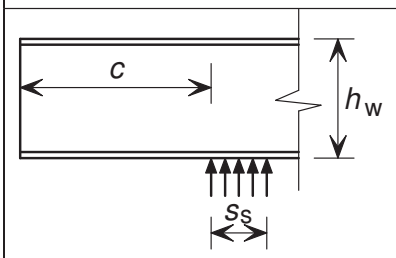	Category 2 - reaction at end support with $c > 1{,}5\ h_w$ clear from a free end;
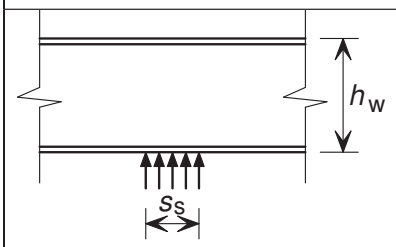	Category 2 - reaction at internal support.

Figure 6.9: Local loads and supports —categories of cross-sections with two or more webs

Documento contenuto nel prodotto EUROCODICI edizione 2011. E' vietato l'uso in rete del singolo documento e la sua riproduzione. E' autorizzata la stampa per uso interno.

6.1.7.4 Stiffened webs

(1) The local transverse resistance of a stiffened web may be determined as specified in (2) for cross-sections with longitudinal web stiffeners folded in such a way that the two folds in the web are on opposite sides of the system line of the web joining the points of intersection of the midline of the web with the midlines of the flanges, see figure 6.10, that satisfy the condition:

$$2 < \frac{e_{max}}{t} < 12 \qquad \text{... (6.21)}$$

where:

e_{max} is the larger eccentricity of the folds relative to the system line of the web.

(2) For cross-sections with stiffened webs satisfying the conditions specified in (1), the local transverse resistance of a stiffened web may be determined by multiplying the corresponding value for a similar unstiffened web, obtained from 6.1.7.2 or 6.1.7.3 as appropriate, by the factor $\kappa_{a,s}$ given by:

$$\kappa_{a,s} = 1{,}45 - 0{,}05\, e_{max}/t \qquad \text{but} \quad \kappa_{a,s} \leq 0{,}95 + 35\,000\, t^2\, e_{min}/(b_d^2\, s_p) \qquad \text{... (6.22)}$$

where:

b_d is the developed width of the loaded flange, see figure 6.10;

e_{min} is the smaller eccentricity of the folds relative to the system line of the web;

s_p is the slant height of the plane web element nearest to the loaded flange, see figure 6.10.

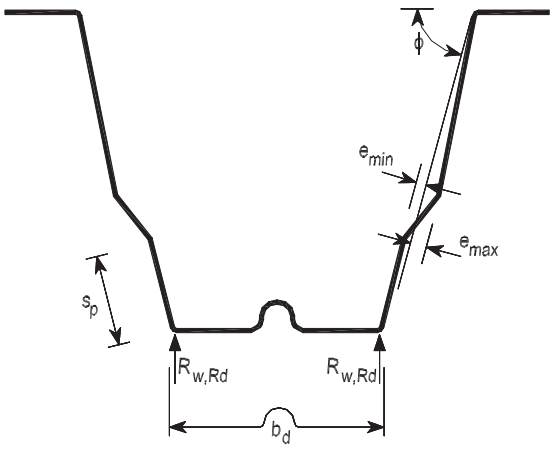

Figure 6.10: Stiffened webs

6.1.8 Combined tension and bending

(1) Cross-sections subject to combined axial tension N_{Ed} and bending moments $M_{y,Ed}$ and $M_{z,Ed}$ should satisfy the criterion:

$$\frac{N_{Ed}}{N_{t,Rd}} + \frac{M_{y,Ed}}{M_{cy,Rd,ten}} + \frac{M_{z,Ed}}{M_{cz,Rd,ten}} \leq 1 \qquad \text{... (6.23)}$$

where:

$N_{t,Rd}$ is the design resistance of a cross-section for uniform tension (6.1.2);

$M_{cy,Rd,ten}$ is the design moment resistance of a cross-section for maximum tensile stress if subject only to moment about the y - y axis (6.1.4);

$M_{cz,Rd,ten}$ is the design moment resistance of a cross-section for maximum tensile stress if subject only to moment about the z - z axis (6.1.4).

Documento contenuto nel prodotto EUROCODICI edizione 2011. E' vietato l'uso in rete del singolo documento e la sua riproduzione. E' autorizzata la stampa per uso interno.

(2) If $M_{cy,Rd,com} \leq M_{cy,Rd,ten}$ or $M_{cz,Rd,com} \leq M_{cz,Rd,ten}$ (where $M_{cy,Rd,com}$ and $M_{cz,Rd,com}$ are the moment resistances for the maximum compressive stress in a cross-section that is subject only to moment about the relevant axis), the following criterion should also be satisfied:

$$\frac{M_{y,Ed}}{M_{cy,Rd.com}} + \frac{M_{z,Ed}}{M_{cz,Rd,com}} - \frac{N_{Ed}}{N_{t,Rd}} \leq 1 \qquad \text{... (6.24)}$$

6.1.9 Combined compression and bending

(1) Cross-sections subject to combined axial compression N_{Ed} and bending moments $M_{y,Ed}$ and $M_{z,Ed}$ should satisfy the criterion:

$$\frac{N_{Ed}}{N_{c,Rd}} + \frac{M_{y,Ed} + \Delta M_{y,Ed}}{M_{cy,Rd,com}} + \frac{M_{z,Ed} + \Delta M_{z,Ed}}{M_{cz,Rd,com}} \leq 1 \qquad \text{... (6.25)}$$

in which $N_{c,Rd}$ is as defined in 6.1.3, $M_{cy,Rd,com}$ and $M_{cz,Rd,com}$ are as defined in 6.1.8.

(2) The additional moments $\Delta M_{y,Ed}$ and $\Delta M_{z,Ed}$ due to shifts of the centroidal axes should be taken as:

$$\Delta M_{y,Ed} = N_{Ed}\, e_{Ny}$$

$$\Delta M_{z,Ed} = N_{Ed}\, e_{Nz}$$

in which e_{Ny} and e_{Nz} are the shifts of y-y and z-z centroidal axis due to axial forces, see 6.1.3(3).

(3) If $M_{cy,Rd,ten} \leq {}_{cy,Rd,com}$ or $M_{cz,Rd,ten} \leq M_{cz,Rd,com}$ the following criterion should also be satisfied:

$$\frac{M_{y,Ed} + \Delta M_{y,Ed}}{M_{cy,Rd,ten}} + \frac{M_{z,Ed} + \Delta M_{z,Ed}}{M_{cz,Rd,ten}} - \frac{N_{Ed}}{N_{c,Rd}} \leq 1 \qquad \text{... (6.26)}$$

in which $M_{cy,Rd,ten}$, $M_{cz,Rd,ten}$ are as defined in 6.1.8.

6.1.10 Combined shear force, axial force and bending moment

(1) For cross-sections subject to the combined action of an axial force N_{Ed}, a bending moment M_{Ed} and a shear force V_{Ed} no reduction due to shear force need not be done provided that $V_{Ed} \leq 0{,}5\ V_{w,Rd}$. If the shear force is larger than half of the shear force resistance then following equations should be satisfied:

$$\frac{N_{Ed}}{N_{Rd}} + \frac{M_{y,Ed}}{M_{y,Rd}} + (1 - \frac{M_{f,Rd}}{M_{pl,Rd}})(\frac{2\,V_{Ed}}{V_{w,Rd}} - 1)^2 \leq 1{,}0 \qquad \text{...(6.27)}$$

where:

N_{Rd} is the design resistance of a cross-section for uniform tension or compression given in 6.1.2 or 6.1.3;

$M_{y,Rd}$ is the design moment resistance of the cross-section given in 6.1.4;

$V_{w,Rd}$ is the design shear resistance of the web given in 6.1.5(1);

$M_{f,Rd}$ is the moment of resistance of a cross-section consisting of the effective area of flanges only, see EN 1993-1-5;

$M_{pl,Rd}$ is the plastic moment of resistance of the cross-section, see EN 1993-1-5.

For members and sheeting with more than one web $V_{w,Rd}$ is the sum of the resistances of the webs. See also EN 1993-1-5.

Documento contenuto nel prodotto EUROCODICI edizione 2011. E' vietato l'uso in rete del singolo documento e la sua riproduzione. E' autorizzata la stampa per uso interno.

6.1.11 Combined bending moment and local load or support reaction

(1) Cross-sections subject to the combined action of a bending moment M_{Ed} and a transverse force due to a local load or support reaction F_{Ed} should satisfy the following:

$$M_{Ed} / M_{c,Rd} \leq 1 \quad \text{... (6.28a)}$$

$$F_{Ed} / R_{w,Rd} \leq 1 \quad \text{... (6.28b)}$$

$$\frac{M_{Ed}}{M_{c,Rd}} + \frac{F_{Ed}}{R_{w,Rd}} \leq 1{,}25 \quad \text{... (6.28c)}$$

where:

$M_{c,Rd}$ is the moment resistance of the cross-section given in 6.1.4.1(1);

$R_{w,Rd}$ is the appropriate value of the local transverse resistance of the web from 6.1.7.

In equation (6.28c) the bending moment M_{Ed} may be calculated at the edge of the support. For members and sheeting with more than one web, $R_{w,Rd}$ is the sum of the local transverse resistances of the individual webs.

6.2 Buckling resistance

6.2.1 General

(1) In members with cross-sections that are susceptible to cross-sectional distortion, account should be taken of possible lateral buckling of compression flanges and lateral bending of flanges generally.

(2) The effects of local and distortional buckling should be taken into account as specified in Section 5.5.

6.2.2 Flexural buckling

(1) The design buckling resistance $N_{b,Rd}$ for flexural buckling should be obtained from EN 1993-1-1 using the appropriate buckling curve from table 6.3 according to the type of cross-section, axis of buckling and yield strength used, see (3).

(2) The buckling curve for a cross-section not included in table 6.3 may be obtained by analogy.

(3) The buckling resistance of a closed built-up cross-section should be determined using either:

- buckling curve b in association with the basic yield strength f_{yb} of the flat sheet material out of which the member is made by cold forming;
- buckling curve c in association with the average yield strength f_{ya} of the member after cold forming, determined as specified in 3.2.3, provided that $A_{eff} = A_g$.

6.2.3 Torsional buckling and torsional-flexural buckling

(1) For members with point-symmetric open cross-sections (e.g Z-purlin with equal flanges), account should be taken of the possibility that the resistance of the member to torsional buckling might be less than its resistance to flexural buckling.

(2) For members with mono-symmetric open cross-sections, see figure 6.12, account should be taken of the possibility that the resistance of the member to torsional-flexural buckling might be less than its resistance to flexural buckling.

(3) For members with non-symmetric open cross-sections, account should be taken of the possibility that the resistance of the member to either torsional or torsional-flexural buckling might be less than its resistance to flexural buckling.

(4) The design buckling resistance $N_{b,Rd}$ for torsional or torsional-flexural buckling should be obtained from EN 1993-1-1, 6.3.1.1 using the relevant buckling curve for buckling about the z-z axis obtained from table 6.3 .

Documento contenuto nel prodotto EUROCODICI edizione 2011. E' vietato l'uso in rete del singolo documento e la sua riproduzione. E' autorizzata la stampa per uso interno.

Table 6.3: Appropriate buckling curve for various types of cross-section

Type of cross-section		Buckling about axis	Buckling curve
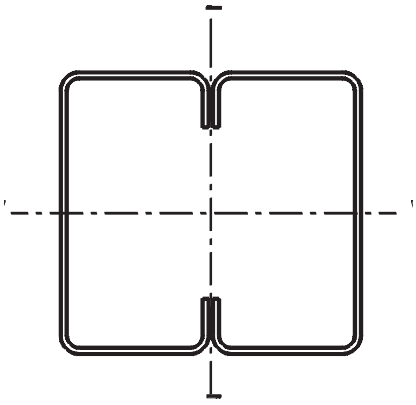	if f_{yb} is used	Any	b
	if f_{ya} is used *)	Any	c
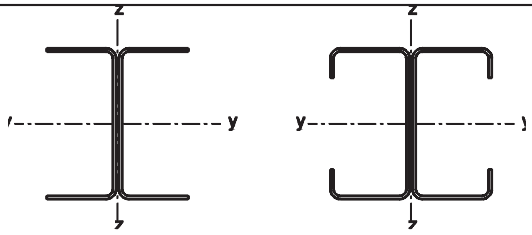		y - y z - z	a b
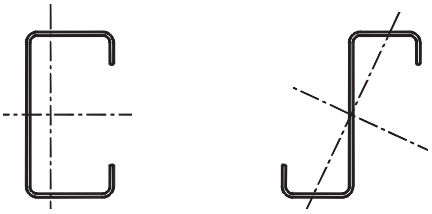		Any	b
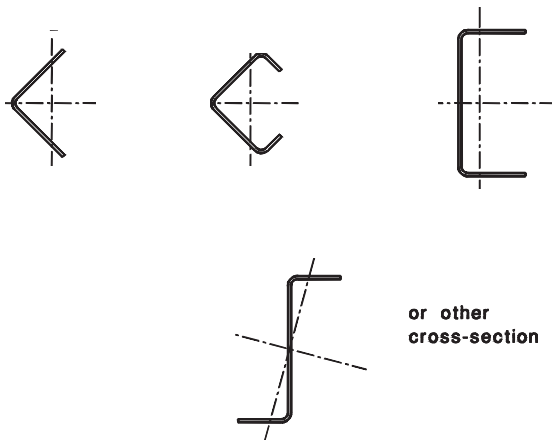		Any	c

*) The average yield strength f_{ya} should not be used unless $A_{eff} = A_g$

Documento contenuto nel prodotto EUROCODICI edizione 2011. E' vietato l'uso in rete del singolo documento e la sua riproduzione. E' autorizzata la stampa per uso interno.

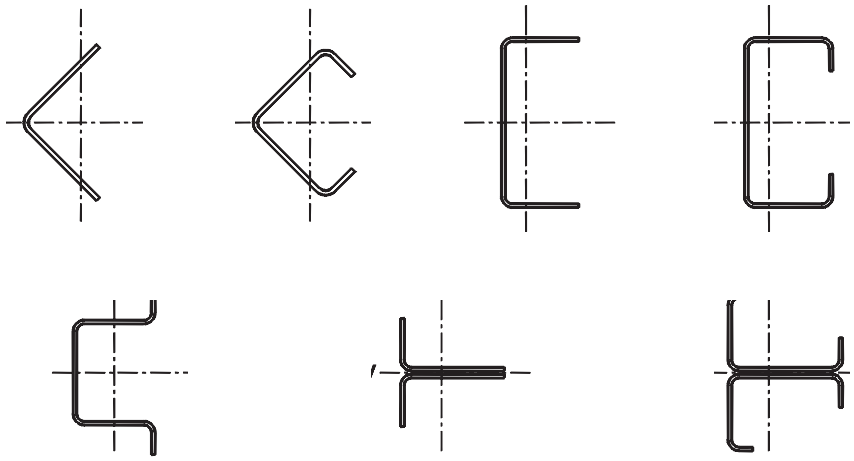

Figure 6.12: Monosymmetric cross-sections susceptible to torsional-flexural buckling

(5) The elastic critical force $N_{cr,T}$ for torsional buckling of simply supported beam should be determined from:

$$N_{cr,T} = \frac{1}{i_o^{\,2}}\left(G\,I_t + \frac{\pi^2 E\,I_w}{l_T^2}\right) \qquad \text{... (6.33a)}$$

with:

$$i_o^{\,2} = i_y^{\,2} + i_z^{\,2} + y_o^{\,2} + z_o^{\,2} \qquad \text{... (6.33b)}$$

where:

G is the shear modulus;

I_t is the torsion constant of the gross cross-section;

I_w is the warping constant of the gross cross-section;

i_y is the radius of gyration of the gross cross-section about the y - y axis;

i_z is the radius of gyration of the gross cross-section about the z - z axis;

l_T is the buckling length of the member for torsional buckling;

y_o, z_o are the shear centre co-ordinates with respect to the centroid of the gross cross-section.

(6) For doubly symmetric cross-sections (e.g. $y_o = z_o = 0$), the elastic critical force $N_{cr,TF}$ for torsional-flexural buckling should be determined from:

$$N_{cr,TF} = N_{cr,T} \qquad \text{...(6.34)}$$

provided $N_{cr,T} < N_{cr,y}$ and $N_{cr,T} < N_{cr,z}$.

Documento contenuto nel prodotto EUROCODICI edizione 2011. E' vietato l'uso in rete del singolo documento e la sua riproduzione. E' autorizzata la stampa per uso interno.

(7) For cross-sections that are symmetrical about the y - y axis (e.g. $z_o = 0$), the elastic critical force $N_{cr,TF}$ for torsional-flexural buckling should be determined from:

$$N_{cr,TF} = \frac{N_{cr,y}}{2\beta}\left[1 + \frac{N_{cr,T}}{N_{cr,y}} - \sqrt{(1 - \frac{N_{cr,T}}{N_{cr,y}})^2 + 4(\frac{y_o}{i_o})^2 \frac{N_{cr,T}}{N_{cr,y}}}\right] \quad \text{... (6.35)}$$

with:

$$\beta = 1 - \left(\frac{y_o}{i_o}\right)^2 .$$

(8) The buckling length l_T for torsional or torsional-flexural buckling should be determined taking into account the degree of torsional and warping restraint at each end of the system length L_T.

(9) For practical connections at each end, the value of l_T / L_T may be taken as follows:

- 1,0 for connections that provide partial restraint against torsion and warping, see figure 6.13(a);
- 0,7 for connections that provide significant restraint against torsion and warping, see figure 6.13(b).

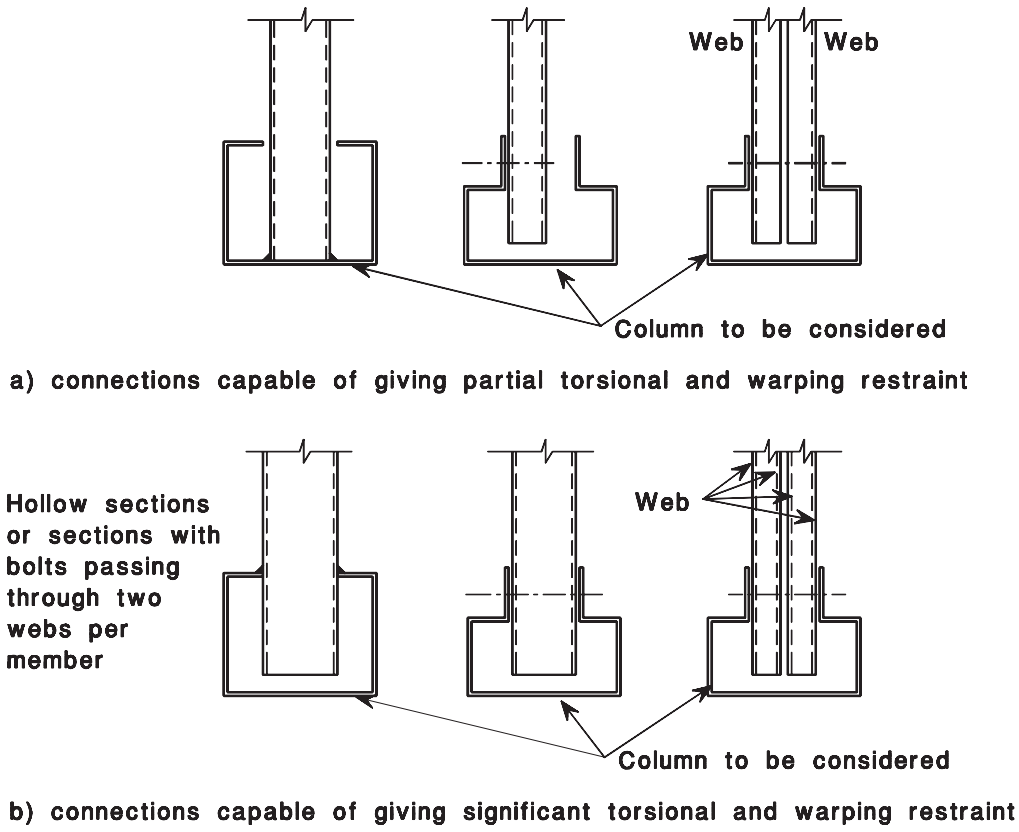

Figure 6.13: Torsional and warping restraint from practical connections

6.2.4 Lateral-torsional buckling of members subject to bending

(1) The design buckling resistance moment of a member that is susceptible to lateral-torsional buckling should be determined according to EN 1993-1-1, section 6.3.2.2 using the lateral buckling curve b.

(2) This method should not be used for the sections that have a significant angle between the principal axes of the effective cross-section, compared to those of the gross cross-section.

6.2.5 Bending and axial compression

(1) The interaction between axial force and bending moment may be obtained from a second-order analysis of the member as specified in EN 1993-1-1, based on the properties of the effective cross-section obtained from Section 5.5. See also 5.3.

Documento contenuto nel prodotto EUROCODICI edizione 2011. E' vietato l'uso in rete del singolo documento e la sua riproduzione. E' autorizzata la stampa per uso interno.

(2) As an alternative the interaction formula (6.38) may be used

$$\left(\frac{N_{\mathrm{Ed}}}{N_{\mathrm{b,Rd}}}\right)^{0,8}+\left(\frac{M_{\mathrm{Ed}}}{M_{\mathrm{b,Rd}}}\right)^{0,8}\leq 1,0 \qquad \ldots(6.36)$$

where $N_{\mathrm{b,Rd}}$ is the design buckling resistance of a compression member according to 6.2.2 (flexural, torsional or torsional-flexural buckling) and $M_{\mathrm{b,Rd}}$ is the design bending moment resistance according to 6.2.4 and M_{Ed} includes the effects of shift of neutral axis, if relevant.

6.3 Bending and axial tension

(1) The interaction equations for compressive force in 6.2.5 are applicable.

7 Serviceability limit states

7.1 General

(1) The rules for serviceability limit states given in Section 7 of EN 1993-1-1 should also be applied to cold-formed members and sheeting.

(2) The properties of the effective cross-section for serviceability limit states obtained from Section 5.1 should be used in all serviceability limit state calculations for cold-formed members and sheeting.

(3) The second moment of area may be calculated alternatively by interpolation of gross cross-section and effective cross-section using the expression

$$I_{\mathrm{fic}} = I_{\mathrm{gr}} - \frac{\sigma_{\mathrm{gr}}}{\sigma}(I_{\mathrm{gr}} - I(\sigma)_{\mathrm{eff}}) \qquad \ldots(7.1)$$

where

I_{gr} is second moment of area of the gross cross-section;

σ_{gr} is maximum compressive bending stress in the serviceability limit state, based on the gross cross-section (positive in formula);

$I(\sigma)_{\mathrm{eff}}$ is the second moment of area of the effective cross-section with allowance for local buckling calculated for a maximum stress $\sigma \geq \sigma_{\mathrm{gr}}$, in which the maximum stress is the largest absolute value of stresses within the calculation length considered.

(4) The effective second moment of area I_{eff} (or I_{fic}) may be taken as variable along the span. Alternatively a uniform value may be used, based on the maximum absolute span moment due to serviceability loading.

7.2 Plastic deformation

(1) In case of plastic global analysis the combination of support moment and support reaction at an internal support should not exceed 0,9 times the combined design resistance, determined using $\gamma_{\mathrm{M,ser}}$, see section 2(5).

(2) The combined design resistance may be determined from 6.1.11, but using the effective cross-section for serviceability limit states and $\gamma_{\mathrm{M,ser}}$.

7.3 Deflections

(1) The deflections may be calculated assuming elastic behaviour.

(2) The influence of slip in the connections (for example in the case of continuous beam systems with sleeves and overlaps) should be considered in the calculation of deflections, forces and moments.

Documento contenuto nel prodotto EUROCODICI edizione 2011. E' vietato l'uso in rete del singolo documento e la sua riproduzione. E' autorizzata la stampa per uso interno.

8 Design of joints

8.1 General

(1) For design assumptions and requirements of joints see EN 1993-1-8.

(2) The following rules apply to core thickness $t_{cor} \leq 4$ mm, not covered by EN 1993-1-8.

8.2 Splices and end connections of members subject to compression

(1) Splices and end connections in members that are subject to compression, should either have at least the same resistance as the cross-section of the member, or be designed to resist an additional bending moment due to the second-order effects within the member, in addition to the internal compressive force N_{Ed} and the internal moments $M_{y,Ed}$ and $M_{z,Ed}$ obtained from the global analysis.

(2) In the absence of a second-order analysis of the member, this additional moment ΔM_{Ed} should be taken as acting about the cross-sectional axis that gives the smallest value of the reduction factor χ for flexural buckling, see 6.2.2.1(2), with a value determined from:

$$\Delta M_{Ed} = N_{Ed} \left(\frac{1}{\chi} - 1 \right) \frac{W_{eff}}{A_{eff}} \sin \frac{\pi a}{l} \qquad \text{...(8.1a)}$$

where:

A_{eff} is the effective area of the cross-section;

a is the distance from the splice or end connection to the nearer point of contraflexure;

l is the buckling length of the member between points of contraflexure, for buckling about the relevant axis;

W_{eff} is the section modulus of the effective cross-section for bending about the relevant axis.

Splices and end connections should be designed to resist an additional internal shear force

$$\Delta V_{Ed} = \frac{\pi N_{Ed}}{l} \left(\frac{1}{\chi} - 1 \right) \frac{W_{eff}}{A_{eff}} \qquad \text{...(8.1b)}$$

(3) Splices and end connections should be designed in such a way that load may be transmitted to the effective portions of the cross-section.

(4) If the constructional details at the ends of a member are such that the line of action of the internal axial force cannot be clearly identified, a suitable eccentricity should be assumed and the resulting moments should be taken into account in the design of the member, the end connections and the splice, if there is one.

8.3 Connections with mechanical fasteners

(1) Connections with mechanical fasteners should be compact in shape. The positions of the fasteners should be arranged to provide sufficient room for satisfactory assembly and maintenance.

NOTE: More information see Part 1-8 of EN 1993.

(2) The shear forces on individual mechanical fasteners in a connection may be assumed to be equal, provided that:

- the fasteners have sufficient ductility;
- shear is not the critical failure mode.

Documento contenuto nel prodotto EUROCODICI edizione 2011. E' vietato l'uso in rete del singolo documento e la sua riproduzione. E' autorizzata la stampa per uso interno.

(3) For design by calculation the resistances of mechanical fasteners subject to predominantly static loads should be determined from:

- table 8.1 for blind rivets;
- table 8.2 for self-tapping screws;
- table 8.3 for cartridge fired pins;
- table 8.4 for bolts.

NOTE: For determining the design resistance of mechanical fasteners by testing see 9(4).

(4) In tables 8.1 to 8.4 the meanings of the symbols should be taken as follows:

A	the gross cross-sectional area of a fastener;
A_s	the tensile stress area of a fastener;
A_{net}	the net cross-sectional area of the connected part;
β_{Lf}	the reduction factor for long joints according to EN 1993-1-8;
d	the nominal diameter of the fastener;
d_o	the nominal diameter of the hole;
d_w	the diameter of the washer or the head of the fastener;
e_1	the end distance from the centre of the fastener to the adjacent end of the connected part, in the direction of load transfer, see figure 8.1;
e_2	the edge distance from the centre of the fastener to the adjacent edge of the connected part, in the direction perpendicular to the direction of load transfer, see figure 8.1;
f_{ub}	the ultimate tensile strength of the fastener material;
$f_{u,sup}$	the ultimate tensile strength of the supporting member into which a screw is fixed;
n	the number of sheets that are fixed to the supporting member by the same screw or pin;
n_f	the number of mechanical fasteners in one connection;
p_1	the spacing centre-to-centre of fasteners in the direction of load transfer, see figure 8.1;
p_2	the spacing centre-to-centre of fasteners in the direction perpendicular to the direction of load transfer, see figure 8.1;
t	the thickness of the thinner connected part or sheet;
t_1	the thickness of the thicker connected part or sheet;
t_{sup}	the thickness of the supporting member into which a screw or a pin is fixed.

(5) The partial factor γ_M for calculating the design resistances of mechanical fasteners should be taken as γ_{M2}:

NOTE: The value γ_{M2} may be given in the National Annex. The value $\gamma_{M2} = 1{,}25$ is recommended.

Documento contenuto nel prodotto EUROCODICI edizione 2011. E' vietato l'uso in rete del singolo documento e la sua riproduzione. E' autorizzata la stampa per uso interno.

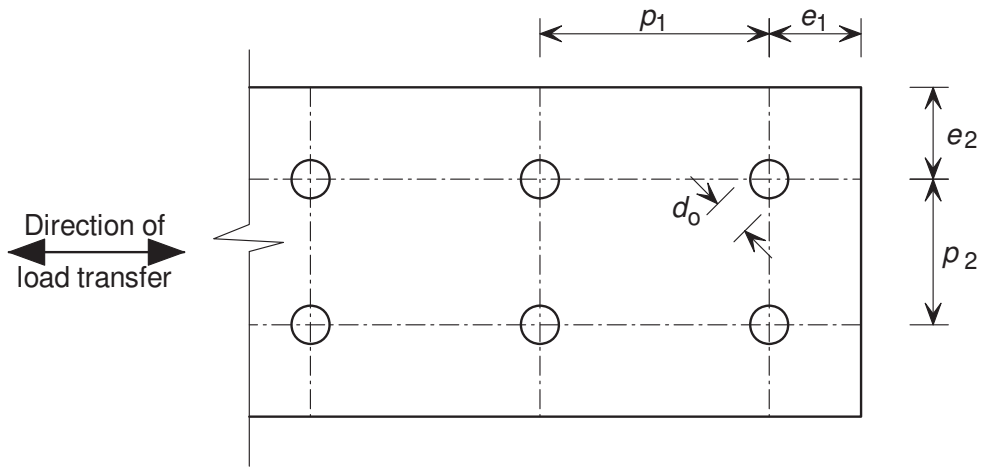

Figure 8.1: End distance, edge distance and spacings for fasteners and spot welds

(6) If the pull-out resistance $F_{o,Rd}$ of a fastener is smaller than its pull-through resistance $F_{p,Rd}$ the deformation capacity should be determined from tests.

(7) The pull-through resistances given in tables 8.2 and 8.3 for self-tapping screws and cartridge fired pins should be reduced if the fasteners are not located centrally in the troughs of the sheeting. If attachment is at a quarter point, the design resistance should be reduced to $0{,}9F_{p,Rd}$ and if there are fasteners at both quarter points, the resistance should be taken as $0{,}7F_{p,Rd}$ per fastener, see figure 8.2.

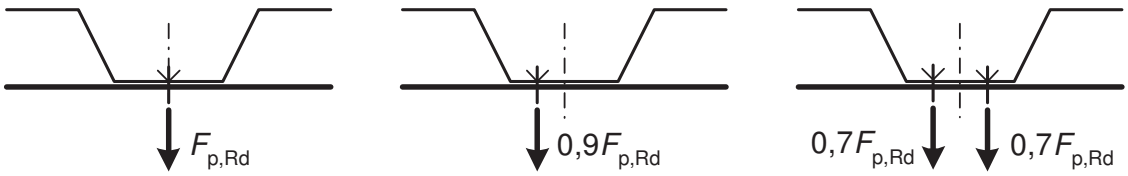

Figure 8.2: Reduction of pull through resistance due to the position of fasteners

(8) For a fastener loaded in combined shear and tension, provided that both $F_{t,Rd}$ and $F_{v,Rd}$ are determined by calculation on the basis of tables 8.1 to 8.4, the resistance of the fastener to combined shear and tension may be verified using:

$$\frac{F_{t,Ed}}{\min(F_{p,Rd}, F_{o,Rd})} + \frac{F_{v,Ed}}{\min(F_{b,Rd}, F_{n,Rd})} \leq 1 \qquad \text{... (8.2)}$$

(9) The gross section distortion may be neglected if the design resistance is obtained from tables 8.1 to 8.4, provided that the fastening is through a flange not more than 150 mm wide.

(10) The diameter of holes for screws should be in accordance with the manufacturer's guidelines. These guidelines should be based on following criteria:

- the applied torque should be just higher than the threading torque;
- the applied torque should be lower than the thread stripping torque or head-shearing torque;
- the threading torque should be smaller than 2/3 of the head-shearing torque.

(11) For long joints a reduction factor β_{Lf} should be taken into account according to EN 1993-1-8, 3.8.

(12) The design rules for blind rivets are valid only if the diameter of the hole is not more than 0,1 mm larger than the diameter of the rivet.

(13) For the bolts M12 and M14 with the hole diameters 2 mm larger than the bolt diameter, reference is made to EN 1993-1-8.

Documento contenuto nel prodotto EUROCODICI edizione 2011. E' vietato l'uso in rete del singolo documento e la sua riproduzione. E' autorizzata la stampa per uso interno.

Table 8.1: Design resistances for blind rivets [1)]

Rivets loaded in shear:
Bearing resistance: $F_{b,Rd} = \alpha f_u d t / \gamma_{M2}$ but $F_{b,Rd} \leq f_u e_1 t / (1{,}2\ \gamma_{M2})$ In which α is given by the following: - if $t = t_1$: $\alpha = 3{,}6\sqrt{t/d}$ but $\alpha \leq 2{,}1$ - if $t_1 \geq 2{,}5t$: $\alpha = 2{,}1$ - if $t < t_1 < 2{,}5t$: obtain α by linear interpolation. Net-section resistance: $F_{n,Rd} = A_{net} f_u / \gamma_{M2}$ Shear resistance: Shear resistance $F_{v,Rd}$ to be determined by testing *[1)] and $F_{v,Rd} = F_{v,Rk} / \gamma_{M2}$
Conditions: [4)] $F_{v,Rd} \geq 1{,}2 F_{b,Rd} / (n_f \beta_{Lf})$ or $F_{v,Rd} \geq 1{,}2 F_{n,Rd}$
Rivets loaded in tension: [2)]
Pull-through resistance: Pull-through resistance $F_{p,Rd}$ to be determined by testing *[1)]. Pull-out resistance: Not relevant for rivets. Tension resistance: Tension resistance $F_{t,Rd}$ to be determined by testing *[1)]
Conditions: $F_{t,Rd} \geq \Sigma F_{p,Rd}$
Range of validity: [3)]
$e_1 \geq 1{,}5d$ $p_1 \geq 3d$ 2,6 mm $\leq d \leq$ 6,4 mm $e_2 \geq 1{,}5d$ $p_2 \geq 3d$ $f_u \leq 550$ N/mm^2
[1)] In this table it is assumed that the thinnest sheet is next to the preformed head of the blind rivet. [2)] Blind rivets are not usually used in tension. [3)] Blind rivets may be used beyond this range of validity if the resistance is determined from the results of tests. [4)] The required conditions should be fulfilled when deformation capacity of the connection is needed. When these conditions are not fulfilled there should be proved that the needed deformation capacity will be provided by other parts of the structure.

NOTE:*[1)] The National Annex may give further information on shear resistance of blind rivets loaded in shear and pull-through resistance and tension resistance of blind rivets loaded in tension.

Documento contenuto nel prodotto EUROCODICI edizione 2011. E' vietato l'uso in rete del singolo documento e la sua riproduzione. E' autorizzata la stampa per uso interno.

Table 8.2: Design resistances for self-tapping screws [1)]

Screws loaded in shear:

Bearing resistance: $F_{b,Rd} = \alpha f_u d t / \gamma_{M2}$

In which α is given by the following:

- if $t = t_1$: $\alpha = 3{,}2\sqrt{t/d}$ but $\alpha \leq 2{,}1$
- if $t_1 \geq 2{,}5t$ and $t < 1{,}0$ mm: $\alpha = 3{,}2\sqrt{t/d}$ but $\alpha \leq 2{,}1$
- if $t_1 \geq 2{,}5t$ and $t \geq 1{,}0$ mm: $\alpha = 2{,}1$
- if $t < t_1 < 2{,}5t$: obtain α by linear interpolation.

Net-section resistance: $F_{n,Rd} = A_{net} f_u / \gamma_{M2}$

Shear resistance: Shear resistance $F_{v,Rd}$ to be determined by testing *[2)]

$F_{v,Rd} = F_{v,Rk} / \gamma_{M2}$

Conditions: [4)] $F_{v,Rd} \geq 1{,}2 F_{b,Rd}$ or $\Sigma F_{v,Rd} \geq 1{,}2 F_{n,Rd}$

Screws loaded in tension:

Pull-through resistance: [2)]

- for static loads: $F_{p,Rd} = d_w t f_u / \gamma_{M2}$
- for screws subject to wind loads and combination of wind loads and static loads: $F_{p,Rd} = 0{,}5\, d_w t f_u / \gamma_{M2}$

Pull-out resistance: If $t_{sup} / s < 1$: $F_{o,Rd} = 0{,}45\, d\, t_{sup} f_{u,sup} / \gamma_{M2}$ (s is the thread pitch)

If $t_{sup} / s \geq 1$: $F_{o,Rd} = 0{,}65\, d\, t_{sup} f_{u,sup} / \gamma_{M2}$

Tension resistance: Tension resistance $F_{t,Rd}$ to be determined by testing *[2)].

Conditions: [4)] $F_{t,Rd} \geq \Sigma F_{p,Rd}$ or $F_{t,Rd} \geq F_{o,Rd}$

Range of validity: [3)]

Generally: $e_1 \geq 3d$ $p_1 \geq 3d$ $3{,}0 \text{ mm} \leq d \leq 8{,}0 \text{ mm}$

$e_2 \geq 1{,}5d$ $p_2 \geq 3d$

For tension: $0{,}5 \text{ mm} \leq t \leq 1{,}5 \text{ mm}$ and $t_1 \geq 0{,}9$ mm

$f_u \leq 550 \text{ N/mm}^2$

[1)] In this table it is assumed that the thinnest sheet is next to the head of the screw.
[2)] These values assume that the washer has sufficient rigidity to prevent it from being deformed appreciably or pulled over the head of the fastener.
[3)] Self-tapping screws may be used beyond this range of validity if the resistance is determined from the results of tests.
[4)] The required conditions should be fulfilled when deformation capacity of the connection is needed. When these conditions are not fulfilled there should be proved that the needed deformation capacity will be provided by other parts of the structure.

NOTE:*[2)] The National Annex may give further information on shear resistance of self-tapping skrews loaded in shear and tension resistance of self-tapping skrews loaded in tension.

Documento contenuto nel prodotto EUROCODICI edizione 2011. E' vietato l'uso in rete del singolo documento e la sua riproduzione. E' autorizzata la stampa per uso interno.

Table 8.3: Design resistances for cartridge fired pins

Pins loaded in shear:
Bearing resistance: $F_{b,Rd} = 3{,}2 f_u d t / \gamma_{M2}$ Net-section resistance: $F_{n,Rd} = A_{net} f_u / \gamma_{M2}$ Shear resistance: Shear resistance $F_{v,Rd}$ to be determined by testing *[3)] $F_{v,Rd} = F_{v,Rk} / \gamma_{M2}$
Conditions: [3)] $F_{v,Rd} \geq 1{,}5 \Sigma F_{b,Rd}$ or $\Sigma F_{v,Rd} \geq 1{,}5 F_{n,Rd}$
Pins loaded in tension:
Pull-through resistance: [1)] - for static loads: $F_{p,Rd} = d_w t f_u / \gamma_{M2}$ - for wind loads and combination of wind loads and static loads: $F_{p,Rd} = 0{,}5 d_w t f_u / \gamma_{M2}$ Pull-out resistance: Pull-out resistance $F_{o,Rd}$ to be determined by testing *[3)] Tension resistance: Tension resistance $F_{t,Rd}$ to be determined by testing *[3)]
Conditions: [3)] $F_{o,Rd} \geq \Sigma F_{p,Rd}$ or $F_{t,Rd} \geq F_{o,Rd}$
Range of validity: [2)]
Generally: $e_1 \geq 4{,}5 d$ — $3{,}7 \text{ mm} \leq d \leq 6{,}0 \text{ mm}$ $e_2 \geq 4{,}5 d$ — for $d = 3{,}7$ mm: $t_{sup} \geq 4{,}0$ mm $p_1 \geq 4{,}5 d$ — for $d = 4{,}5$ mm: $t_{sup} \geq 6{,}0$ mm $p_2 \geq 4{,}5 d$ — for $d = 5{,}2$ mm: $t_{sup} \geq 8{,}0$ mm $f_u \leq 550 \text{ N/mm}^2$ For tension: $0{,}5 \text{ mm} \leq t \leq 1{,}5 \text{ mm}$ — $t_{sup} \geq 6{,}0$ mm
[1)] These values assume that the washer has sufficient rigidity to prevent it from being deformed appreciably or pulled over the head of the fastener. [2)] Cartridge fired pins may be used beyond this range of validity if the resistance is determined from the results of tests. [3)] The required conditions should be fulfilled when deformation capacity of the connection is needed. When these conditions are not fulfilled there should be proved that the needed deformation capacity will be provided by other parts of the structure.

NOTE:*[3)] The National Annex may give further information on shear resistance of cartrige fired pins loaded in shear and pull-out resistance and tension resistance of cartridge fired pins loaded in tension.

Documento contenuto nel prodotto EUROCODICI edizione 2011. E' vietato l'uso in rete del singolo documento e la sua riproduzione. E' autorizzata la stampa per uso interno.

Table 8.4: Design resistances for bolts

Bolts loaded in shear:

Bearing resistance: [2)]

$F_{b,Rd} = 2{,}5\alpha_b\, k_t\, f_u\, d\, t\, /\, \gamma_{M2}$ with α_b is the smallest of 1,0 or $e_1 / (3d)$ and

$k_t = (0{,}8\, t + 1{,}5) / 2{,}5$ for $0{,}75 \text{ mm} \le t \le 1{,}25 \text{ mm}$; $k_t = 1{,}0$ for $t > 1{,}25$ mm

Net-section resistance:

$F_{n,Rd} = (1 + 3\, r\, (d_o / u - 0{,}3))\, A_{net} f_u / \gamma_{M2}$ but $F_{n,Rd} \le A_{net} f_u / \gamma_{M2}$

with:

r = [number of bolts at the cross-section] / [total number of bolts in the connection]

$u = 2\, e_2$ but $u \le p_2$

Shear resistance:

- for strength grades 4.6, 5.6 and 8.8:

$F_{v,Rd} = 0{,}6 f_{ub} A_s / \gamma_{M2}$

- for strength grades 4.8, 5.8, 6.8 and 10.9:

$F_{v,Rd} = 0{,}5 f_{ub} A_s / \gamma_{M2}$

Conditions: [3)] $F_{v,Rd} \ge 1{,}2\, \Sigma F_{b,Rd}$ or $\Sigma F_{v,Rd} \ge 1{,}2\, F_{n,Rd}$

Bolts loaded in tension:

Pull-through resistance: Pull-through resistance $F_{p,Rd}$ to be determined by testing *[4)].

Pull-out resistance: Not relevant for bolts.

Tension resistance: $F_{t,Rd} = 0{,}9 f_{ub} A_s / \gamma_{M2}$

Conditions: [3)] $F_{t,Rd} \ge \Sigma F_{p,Rd}$

Range of validity: [1)]

$e_1 \ge 1{,}0\, d_o$	$p_1 \ge 3\, d_o$	3 mm > $t \ge 0{,}75$ mm	Minimum bolt size: M 6
$e_2 \ge 1{,}5\, d_o$	$p_2 \ge 3\, d_o$		Strength grades: 4.6 - 10.9
$f_u \le 550$ N/mm^2			

[1)] Bolts may be used beyond this range of validity if the resistance is determined from the results of tests.

[2)] For thickness larger than or equal to 3 mm the rules for bolts in EN 1993-1-8 should be used.

[3)] The required conditions should be fulfilled when deformation capacity of the connection is needed. When these conditions are not fulfilled there should be proved that the needed deformation capacity will be provided by other parts of the structure.

NOTE:*[4)] The National Annex may give further information on pull-through resistance of bolts loaded in tension.

Documento contenuto nel prodotto EUROCODICI edizione 2011. E' vietato l'uso in rete del singolo documento e la sua riproduzione. E' autorizzata la stampa per uso interno.

8.4 Spot welds

(1) Spot welds may be used with as-rolled or galvanized parent material up to 4,0 mm thick, provided that the thinner connected part is not more than 3,0 mm thick.

(2) Spot welds may be either resistance welded or fusion welded.

(3) The design resistance $F_{v,Rd}$ of a spot weld loaded in shear should be determined using table 8.5.

(4) In table 8.5 the meanings of the symbols should be taken as follows:

A_{net} is the net cross-sectional area of the connected part;

n_w is the number of spot welds in one connection;

t is the thickness of the thinner connected part or sheet [mm];

t_1 is the thickness of the thicker connected part or sheet [mm];

and the end and edge distances e_1 and e_2 and the spacings p_1 and p_2 are as defined in 8.3(5).

(5) The partial factor γ_M for calculating the design resistances of spot welds should be taken as γ_{M2}.

NOTE: The National Annex may chose the value of γ_{M2}. The value $\gamma_{M2} = 1{,}25$ is recommended.

Table 8.5: Design resistances for spot welds

Spot welds loaded in shear:
Tearing and bearing resistance: - if $t \le t_1 \le 2{,}5\,t$: $F_{tb,Rd} = 2{,}7\sqrt{t}\,d_s f_u / \gamma_{M2}$ [with t in mm] - if $t_1 > 2{,}5\,t$: $F_{tb,Rd} = 2{,}7\sqrt{t}\,d_s f_u / \gamma_{M2}$ but $F_{tb,Rd} \le 0{,}7\,d_s^2 f_u / \gamma_{M2}$ and $F_{tb,Rd} \le 3{,}1\,t\,d_s f_u / \gamma_{M2}$ End resistance: $F_{e,Rd} = 1{,}4\,t\,e_1 f_u / \gamma_{M2}$ Net section resistance: $F_{n,Rd} = A_{net} f_u / \gamma_{M2}$ Shear resistance: $F_{V,Rd} = \frac{\pi}{4} d_s^2 f_u / \gamma_{M2}$
Conditions: $F_{v,Rd} \ge 1{,}25\,F_{tb,Rd}$ or $F_{v,Rd} \ge 1{,}25\,F_{e,Rd}$ or $\Sigma F_{v,Rd} \ge 1{,}25\,F_{n,Rd}$
Range of validity:
$2\,d_s \le e_1 \le 6\,d_s$ $\quad 3\,d_s \le p_1 \le 8\,d_s$ $e_2 \le 4\,d_s$ $\quad 3\,d_s \le p_2 \le 6\,d_s$

(6) The interface diameter d_s of a spot weld should be determined from the following:

- for fusion welding: $d_s = 0{,}5\,t + 5$ mm ... (8.3a)

- for resistance welding: $d_s = 5\sqrt{t}$ [with t in mm] ...(8.3b)

Documento contenuto nel prodotto EUROCODICI edizione 2011. E' vietato l'uso in rete del singolo documento e la sua riproduzione. E' autorizzata la stampa per uso interno.

(7) The value of d_s actually produced by the welding procedure should be verified by shear tests in accordance with Section 9, using single-lap test specimens as shown in figure 8.3. The thickness t of the specimen should be the same as that used in practice.

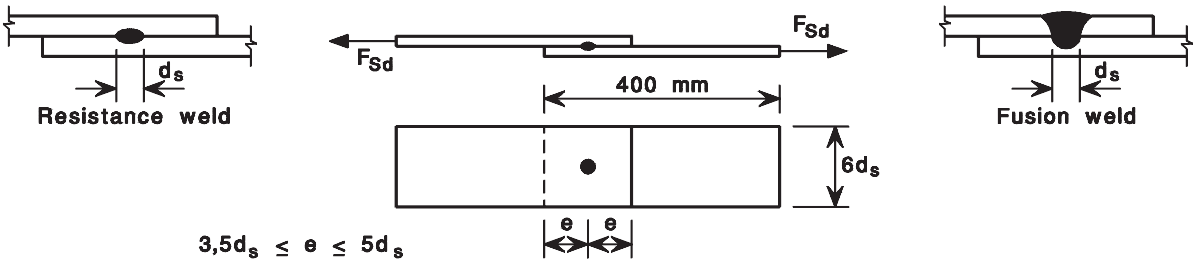

Figure 8.3: Test specimen for shear tests of spot welds

8.5 Lap welds

8.5.1 General

(1) This clause 8.5 should be used for the design of arc-welded lap welds where the parent material is 4,0 mm thick or less. For thicker parent material, lap welds should be designed using EN 1993-1-8.

(2) The weld size should be chosen such that the resistance of the connection is governed by the thickness of the connected part or sheet, rather than the weld.

(3) The requirement in (2) may be assumed to be satisfied if the throat size of the weld is at least equal to the thickness of the connected part or sheet.

(4) The partial factor γ_M for calculating the design resistances of lap welds should be taken as γ_{M2}.

NOTE: The National Annex may give a choice of γ_{M2}. The value $\gamma_{M2} = 1{,}25$ is recommended.

8.5.2 Fillet welds

(1) The design resistance $F_{w.Rd}$ of a fillet-welded connection should be determined from the following:

- for a side fillet that is one of a pair of side fillets:

$$F_{w,Rd} = t L_{w,s} (0{,}9 - 0{,}45 L_{w,s} / b) f_u / \gamma_{M2} \qquad \text{if } L_{w,s} \le b \qquad \text{... (8.4a)}$$

$$F_{w,Rd} = 0{,}45 t b f_u / \gamma_{M2} \qquad \text{if } L_{w,s} > b \qquad \text{... (8.4b)}$$

- for an end fillet:

$$F_{w,Rd} = t L_{w,e} (1 - 0{,}3 L_{w,e} / b) f_u / \gamma_{M2} \qquad [\text{for one weld and if } L_{w,s} \le b] \qquad \text{... (8.4c)}$$

where:

b is the width of the connected part or sheet, see figure 8.4;

$L_{w,e}$ is the effective length of the end fillet weld, see figure 8.4;

$L_{w,s}$ is the effective length of a side fillet weld, see figure 8.4.

Documento contenuto nel prodotto EUROCODICI edizione 2011. E' vietato l'uso in rete del singolo documento e la sua riproduzione. E' autorizzata la stampa per uso interno.

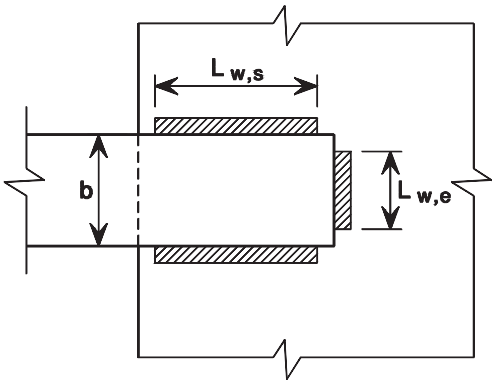

Figure 8.4: Fillet welded lap connection

(2) If a combination of end fillets and side fillets is used in the same connection, its total resistance should be taken as equal to the sum of the resistances of the end fillets and the side fillets. The position of the centroid and realistic assumption of the distribution of forces should be taken into account.

(3) The effective length L_w of a fillet weld should be taken as the overall length of the full-size fillet, including end returns. Provided that the weld is full size throughout this length, no reduction in effective length need be made for either the start or termination of the weld.

(4) Fillet welds with effective lengths less than 8 times the thickness of the thinner connected part should not be designed to transmit any forces.

8.5.3 Arc spot welds

(1) Arc spot welds should not be designed to transmit any forces other than in shear.

(2) Arc spot welds should not be used through connected parts or sheets with a total thickness Σt of more than 4 mm.

(3) Arc spot welds should have an interface diameter d_s of not less than 10 mm.

(4) If the connected part or sheet is less than 0,7 mm thick, a weld washer should be used, see figure 8.5.

(5) Arc spot welds should have adequate end and edge distances as given in the following:

(i) The minimum distance measured parallel to the direction of force transfer, from the centreline of an arc spot weld to the nearest edge of an adjacent weld or to the end of the connected part towards which the force is directed, should not be less than the value of e_{min} given by the following:

if $f_u / f_y < 1{,}15$

$$e_{min} = 1{,}8 \frac{F_{w,Sd}}{t\, f_u / \gamma_{M2}}$$

if $f_u / f_y \geq 1{,}15$

$$e_{min} = 2{,}1 \frac{F_{w,Sd}}{t\, f_u / \gamma_{M2}}$$

(ii) The minimum distance from the centreline of a circular arc spot weld to the end or edge of the connected sheet should not be less than $1{,}5 d_w$ where d_w is the visible diameter of the arc spot weld.

(iii) The minimum clear distance between an elongated arc spot weld and the end of the sheet and between the weld and the edge of the sheet should not be less than $1{,}0\, d_w$.

Documento contenuto nel prodotto EUROCODICI edizione 2011. E' vietato l'uso in rete del singolo documento e la sua riproduzione. E' autorizzata la stampa per uso interno.

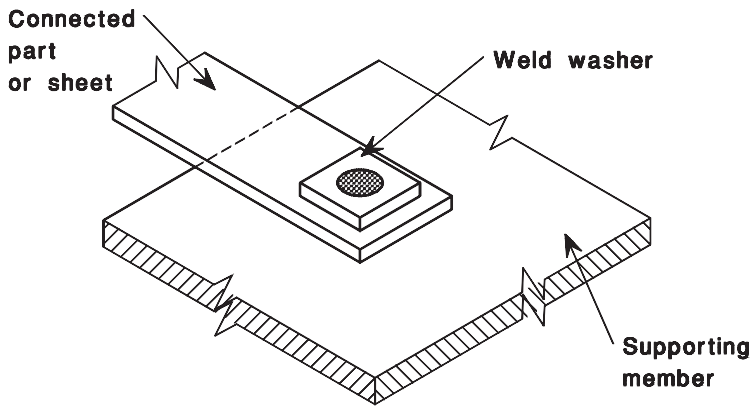

Figure 8.5: Arc spot weld with weld washer

(6) The design shear resistance $F_{w,Rd}$ of a circular arc spot weld should be determined as follows:

$$F_{w,Rd} = (\pi/4)\, d_s^2 \times 0{,}625 f_{uw} / \gamma_{M2} \qquad \text{... (8.5a)}$$

where:

f_{uw} is the ultimate tensile strength of the welding electrodes;

but $F_{w,Rd}$ should not be taken as more than the resistance given by the following:

- if $d_p / \Sigma t \leq 18\,(420 / f_u)^{0,5}$:

$$F_{w,Rd} = 1{,}5\, d_p \Sigma t\ f_u / \gamma_{M2} \qquad \text{... (8.5b)}$$

- if $18\,(420 / f_u)^{0,5} < d_p / \Sigma t < 30\,(420 / f_u)^{0,5}$:

$$F_{w,Rd} = 27\,(420 / f_u)^{0,5}\ (\Sigma t)^2\ f_u / \gamma_{M2} \qquad \text{... (8.5c)}$$

- if $d_p / \Sigma t \geq 30\,(420 / f_u)^{0,5}$:

$$F_{w,Rd} = 0{,}9\, d_p \Sigma t\ f_u / \gamma_{M2} \qquad \text{... (8.5d)}$$

with d_p according to (8).

(7) The interface diameter d_s of an arc spot weld, see figure 8.6, should be obtained from:

$$d_s = 0{,}7 d_w - 1{,}5 \Sigma t \quad \text{but} \quad d_s \geq 0{,}55\, d_w \qquad \text{... (8.6)}$$

where:

d_w is the visible diameter of the arc spot weld, see figure 8.6.

Documento contenuto nel prodotto EUROCODICI edizione 2011. E' vietato l'uso in rete del singolo documento e la sua riproduzione. E' autorizzata la stampa per uso interno.

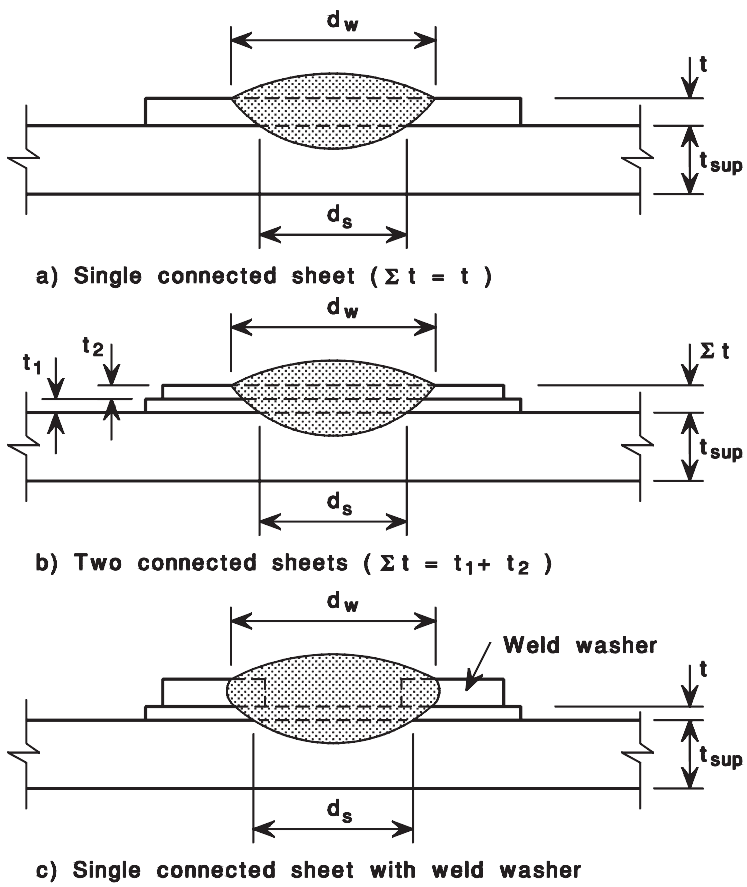

Figure 8.6: Arc spot welds

(8) The effective peripheral diameter d_p of an arc spot weld should be obtained as follows:

- for a single connected sheet or part of thickness t:

$$d_p = d_w - t \qquad \text{... (8.7a)}$$

- for multiple connected sheets or parts of total thickness Σt:

$$d_p = d_w - 2\Sigma t \qquad \text{... (8.7b)}$$

(9) The design shear resistance $F_{w,Rd}$ of an elongated arc spot weld should be determined from:

$$F_{w,Rd} = [(\pi/4)\, d_s^2 + L_w\, d_s] \times 0{,}625 f_{uw} / \gamma_{M2} \qquad \text{... (8.8a)}$$

but $F_{w,Rd}$ should not be taken as more than the peripheral resistance given by:

$$F_{w,Rd} = (0{,}5\, L_w + 1{,}67\, d_p)\, \Sigma t f_u / \gamma_{M2} \qquad \text{... (8.8b)}$$

where:

L_w is the length of the elongated arc spot weld, measured as shown in figure 8.7.

Documento contenuto nel prodotto EUROCODICI edizione 2011. E' vietato l'uso in rete del singolo documento e la sua riproduzione. E' autorizzata la stampa per uso interno.

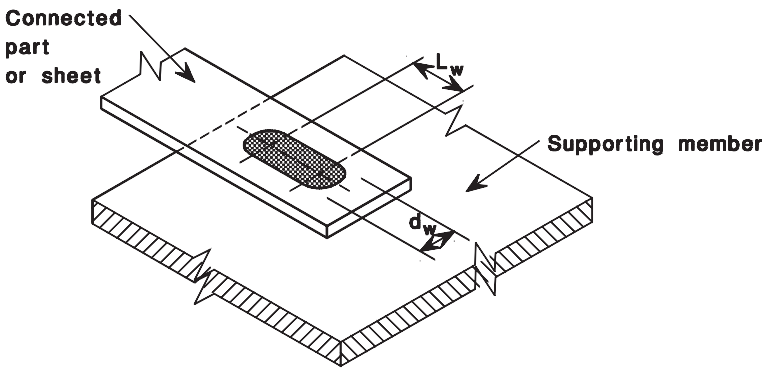

Figure 8.7: Elongated arc spot weld

9 Design assisted by testing

(1) This Section 9 may be used to apply the principles for design assisted by testing given in EN 1990 and in Section 2.5. of EN 1993-1-1, with the additional specific requirements of cold-formed members and sheeting.

(2) Testing should apply the principles given in Annex A.

NOTE 1: The National Annex may give further information on testing in addition to Annex A.

NOTE 2: Annex A gives standardised procedures for:

- tests on profiled sheets and liner trays;
- tests on cold-formed members;
- tests on structures and portions of structures;
- tests on beams torsionally restrained by sheeting;
- evaluation of test results to determine design values.

(3) Tensile testing of steel should be carried out in accordance with EN 10002-1. Testing of other steel properties should be carried out in accordance with the relevant European Standards.

(4) Testing of fasteners and connections should be carried out in accordance with the relevant European Standard or International Standard.

NOTE: Pending availability of an appropriate European or International Standard, information on testing procedures for fasteners may be obtained from:

ECCS Publication No. 21 (1983): *European recommendations for steel construction: the design and testing of connections in steel sheeting and sections*;

ECCS Publication No. 42 (1983): *European recommendations for steel construction: mechanical fasteners for use in steel sheeting and sections.*

Documento contenuto nel prodotto EUROCODICI edizione 2011. E' vietato l'uso in rete del singolo documento e la sua riproduzione. E' autorizzata la stampa per uso interno.

10 Special considerations for purlins, liner trays and sheetings

10.1 Beams restrained by sheeting

10.1.1 General

(1) The provisions given in this clause 10.1 may be applied to beams (called purlins in this Section) of *Z, C, Σ, U* and *Hat* cross-section with $h / t < 233$, $c / t \leq 20$ for single fold and $d / t \leq 20$ for double edge fold.

NOTE: Other limits are possible if verified by tersting. The National Annex may give informations on tests. Standard tests as given in Annex A are recommended.

(2) These provisions may be used for structural systems of purlins with anti-sag bars, continuous, sleeved and overlapped systems.

(3) These provisions may also be applied to cold-formed members used as side rails, floor beams and other similar types of beam that are similarly restrained by sheeting.

(4) Side rails may be designed on the basis that wind pressure has a similar effect on them to gravity loading on purlins, and that wind suction acts on them in a similar way to uplift loading on purlins.

(5) Full continuous lateral restraint may be supplied by trapezoidal steel sheeting or other profiled steel sheeting with sufficient stiffness, continuously connected to the flange of the purlin through the troughs of the sheets. The purlin at the connection to trapetzoidal sheeting may be regarded as laterally restrained, if clause 10.1.1(6) is fulfilled. In other cases (for example, fastening through the crests of the sheets) the degree of restraint should either be validated by experience, or determined from tests.

NOTE: For tests see Annex A.

(6) If the trapetzoidal sheeting is connected to a purlin and the condition expressed by the equation (10.1a) is met, the purlin at the connection may be regarded as being laterally restrained in the plane of the sheeting:

$$S \geq \left(EI_{\mathrm{w}} \frac{\pi^2}{L^2} + GI_{\mathrm{t}} + EI_{\mathrm{z}} \frac{\pi^2}{L^2} 0{,}25\, h^2 \right) \frac{70}{h^2} \qquad \ldots(10.1\mathrm{a})$$

where

- S is the portion of the shear stiffness provided by the sheeting for the examined member connected to the sheeting at each rib (If the sheeting is connected to a purlin every second rib only, then S should be substituted by $0{,}20\, S$);
- I_{w} is the warping constant of the purlin;
- I_{t} is the torsion constant of the purlin;
- I_{z} is the second moment of area of the cross-section about the minor axis of the cross-section of the purlin;
- L is the span of the purlin;
- h is the height of the purlin.

NOTE 1: The equation (10.1a) may also be used to determine the lateral stability of member flanges used in combination with other types of cladding than trapezoidal sheeting, provided that the connections are of suitable design.

NOTE 2: The shear stiffness *S* may be calculated using ECCS guidance (see NOTE in 9(4)) or determined by tests.

(7) Unless alternative support arrangements may be justified from the results of tests the purlin should have support details, such as cleats, that prevent rotation and lateral displacement at its supports. The effects of forces in the plane of the sheeting, that are transmitted to the supports of the purlin, should be taken into account in the design of the support details.

(8) The behaviour of a laterally restrained purlin should be modelled as outlined in figure 10.1. The connection of the purlin to the sheeting may be assumed to partially restrain the twisting of the purlin. This partial torsional restraint may be represented by a rotational spring with a spring stiffness C_{D}. The stresses in the free flange, not directly connected to the sheeting, should then be calculated by superposing the effects of in-plane bending and the effects of torsion, including lateral bending due to cross-sectional distortion. The rotational restraint given by the sheeting should be determined following 10.1.5.

Documento contenuto nel prodotto EUROCODICI edizione 2011. E' vietato l'uso in rete del singolo documento e la sua riproduzione. E' autorizzata la stampa per uso interno.

(9) Where the free flange of a single span purlin is in compression under uplift loading, allowance should also be made for the amplification of the stresses due to torsion and distortion.

(10) The shear stiffness of trapezoidal sheeting connected to the purlin at each rib and connected in every side overlap may be calculated as

$$S = 1000\sqrt{t^3}\,(50 + 10\sqrt[3]{b_{\text{roof}}})\,\frac{s}{h_{\text{w}}} \qquad (N), \qquad t \text{ and } b_{\text{roof}} \text{ in mm} \qquad \ldots(10.1b)$$

where t is the design thickness of sheeting, b_{roof} is the width of the roof, s is the distance between the purlins and h_{w} is the profile depth of sheeting. All dimensions are given in mm. For liner trays the shear stiffness is S_{v} times distance between purlins, where S_{v} is calculated according to 10.3.5(6).

10.1.2 Calculation methods

(1) Unless a second order analysis is carried out, the method given in 10.1.3 and 10.1.4 should be used to allow for the tendency of the free flange to move laterally (thus inducing additional stresses) by treating it as a beam subject to a lateral load $q_{\text{h,Ed}}$, see figure 10.1.

(2) For use in this method, the rotational spring should be replaced by an equivalent lateral linear spring of stiffness K. In determining K the effects of cross-sectional distortion should also be allowed for. For this purpose, the free flange may be treated as a compression member subject to a non-uniform axial force, with a continuous lateral spring support of stiffness K.

(3) If the free flange of a purlin is in compression due to in-plane bending (for example, due to uplift loading in a single span purlin), the resistance of the free flange to lateral buckling should also be verified.

(4) For a more precise calculation, a numerical analysis should be carried out, using values of the rotational spring stiffness C_{D} obtained from 10.1.5.2. Allowance should be made for the effects of an initial bow imperfection of (e_{o}) in the free flange, defined as in 5.3. The initial imperfection should be compatible with the shape of the relevant buckling mode, determined by the eigen-vectors obtained from the elastic first order buckling analysis.

(5) A numerical analysis using the rotational spring stiffness C_{D} obtained from 10.1.5.2 may also be used if lateral restraint is not supplied or if its effectiveness cannot be proved. When the numerical analysis is carried out, it should take into account the bending in two directions, torsional St Venant stiffness and warping stiffness about the imposed rotation axis.

(6) If a 2nd order analysis is carried out, effective sections and stiffness, due to local buckling, should be taken into account.

NOTE: For a simplified design of purlins made of C-, Z- and Σ- cross sections see Annex E.

Documento contenuto nel prodotto EUROCODICI edizione 2011. E' vietato l'uso in rete del singolo documento e la sua riproduzione. E' autorizzata la stampa per uso interno.

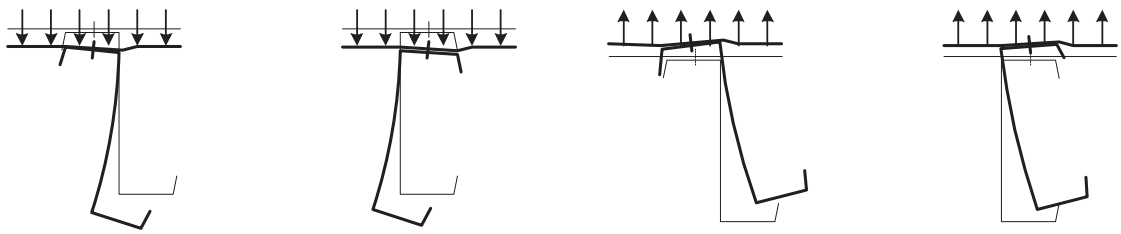

a) Z and C section purlin with upper flange connected to sheeting

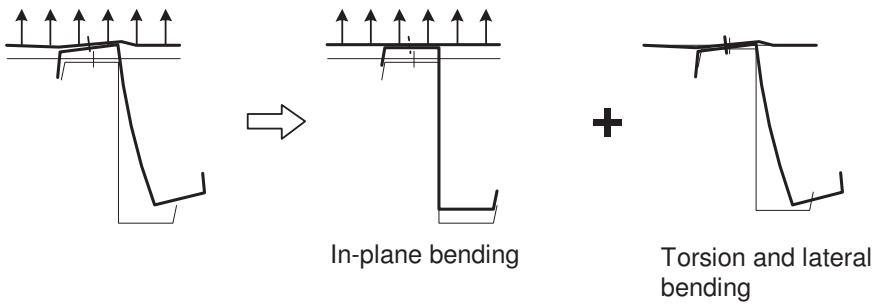

b) Total deformation split into two parts

c) Model purlin as laterally braced with rotationally spring restraint C_D from sheeting

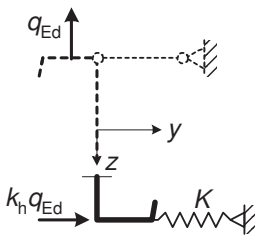

d) As a simplification replace the rotational spring C_D by a lateral spring stiffness K

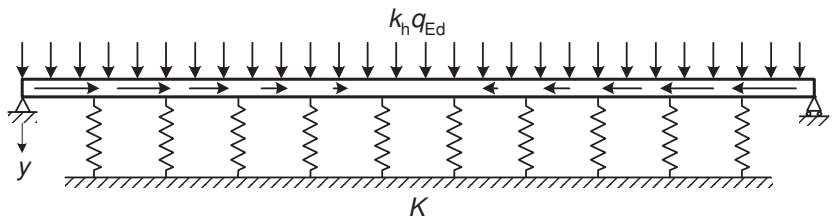

e) Free flange of purlin modelled as beam on elastic foundation. Model representing effect of torsion and lateral bending (including cross section distortion) on single span with uplift loading.

Figure 10.1: Modelling laterally braced purlins rotationally restrained by sheeting

Documento contenuto nel prodotto EUROCODICI edizione 2011. E' vietato l'uso in rete del singolo documento e la sua riproduzione. E' autorizzata la stampa per uso interno.

10.1.3 Design criteria

10.1.3.1 Single span purlins

(1) For gravity loading, a single span purlin should satisfy the criteria for cross-section resistance given in 10.1.4.1. If it is subject to axial compression, it should also satisfy the criteria for stability of the free flange given in 10.1.4.2.

(2) For uplift loading, a single span purlin should satisfy the criteria for cross-section resistance given in 10.1.4.1 and the criteria for stability of the free flange given in 10.1.4.2.

10.1.3.2 Two-spans continuous purlins with gravity load

(1) The moments due to gravity loading in a purlin that is physically continuous over two spans without overlaps or sleeves, may either be obtained by calculation or based on the results of tests.

(2) If the moments are calculated they should be determined using elastic global analysis. The purlin should satisfy the criteria for cross-section resistance given in 10.1.4.1. For the moment at the internal support, the criteria for stability of the free flange given in 10.1.4.2 should also be satisfied. For mid-support should be checked also for bending moment + support reaction (web crippling if cleats are not used) and for bending moment + shear forces depending on the case under consideration.

(3) Alternatively the moments may be determined using the results of tests in accordance with Section 9 and Annex A.5 on the moment-rotation behaviour of the purlin over the internal support.

NOTE: Appropriate testing procedures are given in Annex A.

(4) The design value of the resistance moment at the supports $M_{\text{sup,Rd}}$ for a given value of the load per unit length q_{Ed}, should be obtained from the intersection of two curves representing the design values of:

- the moment-rotation characteristic at the support, obtained by testing in accordance with Section 9 and Annex A.5;
- the theoretical relationship between the support moment $M_{\text{sup,Ed}}$ and the corresponding plastic hinge rotation ϕ_{Ed} in the purlin over the support.

To determine the final design value of the support moment $M_{\text{sup,Ed}}$ allowance should be made for the effect of the lateral load in the free flange and/or the buckling stability of that free flange around the mid-support, which are not fully taken into account by the internal support test as given in clause A.5.2. If the free flange is physically continued at the support and if the distance between the support and the nearest anti-sag bar is larger than 0,5 s, the lateral load $q_{\text{h,Ed}}$ according to 10.1.4.2 should be taken into account in verification of the resistance at mid-support. Alternatively, full-scale tests for two or multi-span purlins may be used to determine the effect of the lateral load in the free flange and/or the buckling stability of that free flange around the mid-support.

(5) The span moments should then be calculated from the value of the support moment.

(6) The following expressions may be used for a purlin with two equal spans:

$$\phi_{\text{Ed}} = \frac{L}{12\,E\,I_{\text{eff}}}\left[\,q_{\text{Ed}}\,L^2 - 8\,M_{\text{sup,Ed}}\,\right] \qquad \text{... (10.2a)}$$

$$M_{\text{spn,Ed}} = \frac{\left(\,q_{\text{Ed}}\,L^2 - 2\,M_{\text{sup,Rd}}\,\right)^2}{8\,q_{\text{Ed}}\,L^2} \qquad \text{... (10.2b)}$$

where:

I_{eff} is the effective second moment of area for the moment $M_{\text{spn,Ed}}$;

L is the span;

$M_{\text{spn,Ed}}$ is the maximum moment in the span.

Documento contenuto nel prodotto EUROCODICI edizione 2011. E' vietato l'uso in rete del singolo documento e la sua riproduzione. E' autorizzata la stampa per uso interno.

(7) The expressions for a purlin with two unequal spans, and for non-uniform loading (e.g. snow accumulation), and for other similar cases, the formulas (10.2a) and (10.2b) are not valid and appropriate analysis should be made for these cases.

(8) The maximum span moment $M_{spn,Ed}$ in the purlin should satisfy the criteria for cross-section resistance given in 10.1.4.1. Alternatively the resistance moment in the span may be determined by testing. A single span test may be used with a span comparable to the distance between the points of contraflexure in the span.

10.1.3.3 Two-span continuous purlins with uplift loading

(1) The moments due to uplift loading in a purlin that is physically continuous over two spans without overlaps or sleeves, should be determined using elastic global analysis.

(2) The moment over the internal support should satisfy the criteria for cross-section resistance given in 10.1.4.1. Because the support reaction is a tensile force, no account need be taken of its interaction with the support moment. The mid-support should be checked also for ineraction of bending moment and shear forces.

(3) The moments in the spans should satisfy the criteria for stability of the free flange given in 10.1.4.2.

10.1.3.4 Purlins with semi-continuity given by overlaps or sleeves

(1) The moments in purlins in which continuity over two or more spans is given by overlaps or sleeves at internal supports, should be determined taking into account the effective section properties of the cross-section and the effects of the overlaps or sleeves.

(2) Tests may be carried out on the support details to determine:

- the flexural stiffness of the overlapped or sleeved part;

- the moment-rotation characteristic for the overlapped or sleeved part. Note, that only when the failure occurs at the support with cleat or similar preventing lateral displacements at the support, then the plastic redistribution of bending moments may be used for sleeved and overlapped systems;

- the resistance of the overlapped or sleeved part to combined support reaction and moment;

- the resistance of the non-overlapped unsleeved part to combined shear force and bending moment.

Alternatively the characteristics of the mid-support details may be determined by numerical methods if the design procedure is at least validated by a relevant numbers of tests.

(3) For gravity loading, the purlin should satisfy the following criteria:

- at internal supports, the resistance to combined support reaction and moment determined e.g. by calculation assisted by testing;

- near supports, the resistance to combined shear force and bending moment determined e.g. by calculation assisted by testing;

- in the spans, the criteria for cross-section resistance given in 10.1.4.1;

- if the purlin is subject to axial compression, the criteria for stability of the free flange given in 10.1.4.2.

(4) For uplift loading, the purlin should satisfy the following criteria:

- at internal supports, the resistance to combined support reaction and moment determined e.g. by calculation assisted by testing, taking into account the fact that the support reaction is a tensile force in this case;

- near supports, the resistance to combined shear force and bending moment determined e.g. by calculation assisted by testing;

- in the spans, the criteria for stability of the free flange given in 10.1.4.2;

- if the purlin is subjected to axial compression, the criteria for stability of the free flange is given in 10.1.4.2.

10.1.3.5 Serviceability criteria

(1) The serviceability criteria relevant to purlins should also be satisfied.

Documento contenuto nel prodotto EUROCODICI edizione 2011. E' vietato l'uso in rete del singolo documento e la sua riproduzione. E' autorizzata la stampa per uso interno.

10.1.4 Design resistance

10.1.4.1 Resistance of cross-sections

(1) For a purlin subject to axial force and transverse load the resistance of the cross-section should be verified as indicated in figure 10.2 by superposing the stresses due to:

- the in-plane bending moment $M_{y,Ed}$;

- the axial force N_{Ed};

- an equivalent lateral load $q_{h,Ed}$ acting on the free flange, due to torsion and lateral bending, see (3).

(2) The maximum stresses in the cross-section should satisfy the following:

- restrained flange:

$$\sigma_{max,Ed} = \frac{M_{y,Ed}}{W_{eff,y}} + \frac{N_{Ed}}{A_{eff}} \leq f_y / \gamma_M \qquad \text{... (10.3a)}$$

- free flange:

$$\sigma_{max,Ed} = \frac{M_{y,Ed}}{W_{eff,y}} + \frac{N_{Ed}}{A_{eff}} + \frac{M_{fz,Ed}}{W_{fz}} \leq f_y / \gamma_M \qquad \text{... (10.3b)}$$

where:

A_{eff} is the effective area of the cross-section for only uniform compression;

f_y is the yield strength as defined in 3.2.1(5);

$M_{fz,Ed}$ is the bending moment in the free flange due to the lateral load $q_{h,Ed}$, see formula (10.4);

$W_{eff,y}$ is the effective section modulus of the cross-section for only bending about the y - y axis;

W_{fz} is the gross elastic section modulus of the free flange plus the contributing part of the web for bending about the z-z axis; unless a more sophisticated analysis is carried out the contributing part of the web may be taken equal to 1/5 of the web height from the point of web-flange intersection in case of C- and Z-sections and 1/6 of the web height in case of Σ-section, see Figure 10.2;

and $\gamma_M = \gamma_{M0}$ if $A_{eff} = A_g$ or if $W_{eff,y} = W_{el,y}$ and $N_{Ed} = 0$, otherwise $\gamma_M = \gamma_{M1}$.

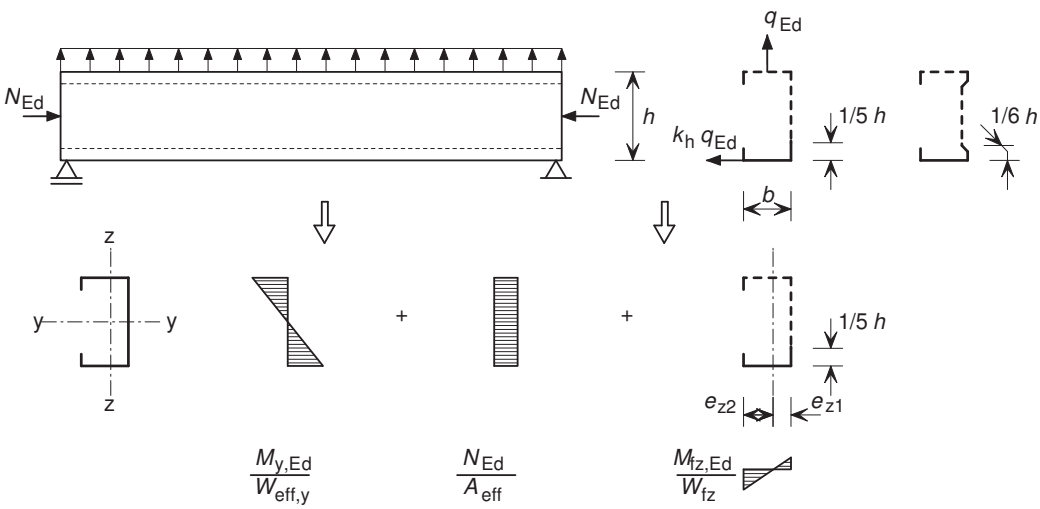

Figure 10.2: Superposition of stresses

Documento contenuto nel prodotto EUROCODICI edizione 2011. E' vietato l'uso in rete del singolo documento e la sua riproduzione. E' autorizzata la stampa per uso interno.

(3) The equivalent lateral load $q_{h,Ed}$ acting on the free flange, due to torsion and lateral bending, should be obtained from:

$$q_{h,Ed} = k_h \, q_{Ed} \qquad \text{... (10.4)}$$

(4) The coefficient k_h should be obtained as indicated in figure 10.3 for common types of cross-section.

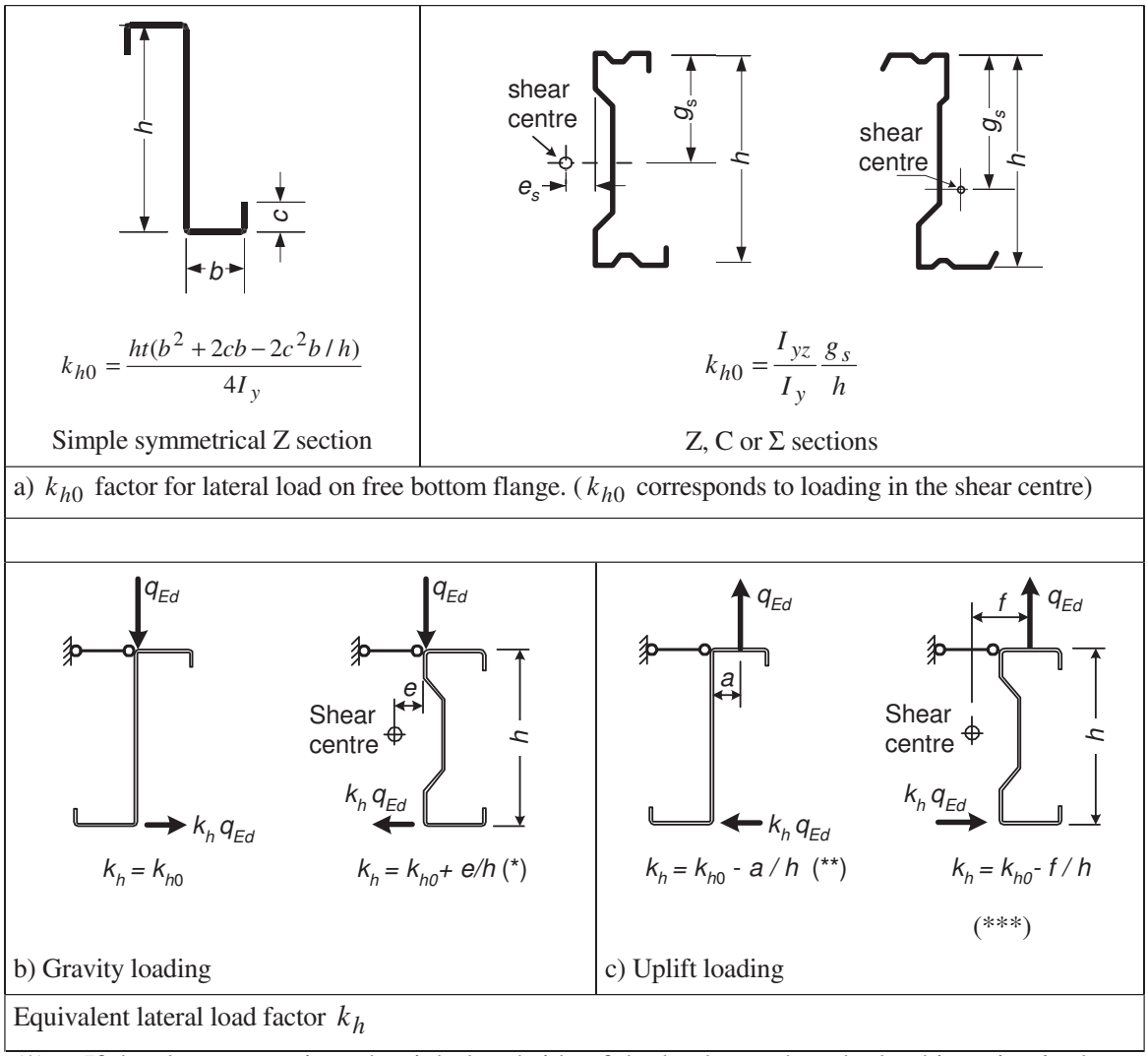

(*) If the shear centre is at the right hand side of the load q_{Ed} then the load is acting in the opposite direction.

(**) If $a/h > k_{h0}$ then the load is acting in the opposite direction.

(***) The value of f is limited to the position of the load q_{Ed} between the edges of the top flange.

Figure 10.3: Conversion of torsion and lateral bending into an equivalent lateral load $k_h \, q_{Ed}$

Documento contenuto nel prodotto EUROCODICI edizione 2011. E' vietato l'uso in rete del singolo documento e la sua riproduzione. E' autorizzata la stampa per uso interno.

(5) The lateral bending moment $M_{fz,Ed}$ may be determined from expression (10.5) except for a beam with the free flange in tension, where, due to positive influence of flange curling and second order effect moment $M_{fz,Ed}$ may be taken equal to zero:

$$M_{fz,Ed} = \kappa_R M_{0,fz,Ed} \quad \text{... (10.5)}$$

where:

$M_{0,fz,Ed}$ is the initial lateral bending moment in the free flange without any spring support;

κ_R is a correction factor for the effective spring support.

(6) The initial lateral bending moment in the free flange $M_{0,fz,Ed}$ may be determined from table 10.1 for the critical locations in the span, at supports, at anti-sag bars and between anti-sag bars. The validity of the table 10.1 is limited to the range $R \leq 40$.

(7) The correction factor κ_R for the relevant location and boundary conditions, may be determined from table 10.1 (or using the theory of beams on the elastic Winkler foundation), using the value of the coefficient R of the spring support given by:

$$R = \frac{K L_a^4}{\pi^4 E I_{fz}} \quad \text{... (10.6)}$$

where:

I_{fz} is the second moment of area of the gross cross-section of the free flange plus the contributing part of the web for bending about the z-z axis, see 10.1.4.1(2); when numerical analysis is carried out, see 10.1.2(5);

K is the lateral spring stiffness per unit length from 10.1.5.1;

L_a is the distance between anti-sag bars, or if none are present, the span L of the purlin.

Documento contenuto nel prodotto EUROCODICI edizione 2011. E' vietato l'uso in rete del singolo documento e la sua riproduzione. E' autorizzata la stampa per uso interno.

Table 10.1: Values of initial moment $M_{0,fz,Ed}$ and correction factor κ_R

System	Location	$M_{0,fz,Ed}$	κ_R
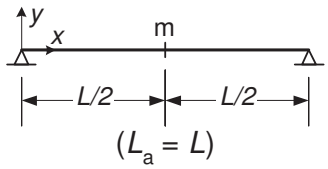	m	$\frac{1}{8} q_{h,Ed} L_a^2$	$\kappa_R = \frac{1-0{,}0225R}{1+1{,}013R}$
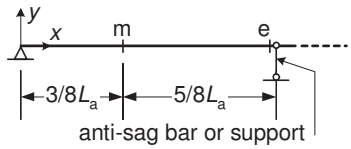	m	$\frac{9}{128} q_{h,Ed} L_a^2$	$\kappa_R = \frac{1-0{,}0141R}{1+0{,}416R}$
	e	$-\frac{1}{8} q_{h,Ed} L_a^2$	$\kappa_R = \frac{1+0{,}0314R}{1+0{,}396R}$
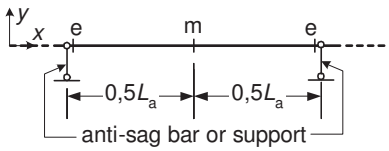	m	$\frac{1}{24} q_{h,Ed} L_a^2$	$\kappa_R = \frac{1-0{,}0125R}{1+0{,}198R}$
	e	$-\frac{1}{12} q_{h,Ed} L_a^2$	$\kappa_R = \frac{1+0{,}0178R}{1+0{,}191R}$

10.1.4.2 Buckling resistance of free flange

(1) If the free flange is in compression, its buckling resistance should be verified using:

$$\frac{1}{\chi_{LT}} \left(\frac{M_{y,Ed}}{W_{eff,y}} + \frac{N_{Ed}}{A_{eff}} \right) + \frac{M_{fz,Ed}}{W_{fz}} \leq f_{yb} / \gamma_{M1} \qquad \text{... (10.7)}$$

in which χ_{LT} is the reduction factor for lateral torsional buckling (flexural buckling of the free flange).

NOTE: The use of the χ_{LT}-value may be chosen in the National Annex. The use of EN 1993-1-1, 6.3.2.3 using buckling curve b (α_{LT} = 0,34 ; $\bar{\lambda}_{LT,0} = 0{,}4$; $\beta = 0{,}75$) is recommended for the relative slenderness $\bar{\lambda}_{fz}$ given in (2). In the case of an axial compression force N_{Ed}, when the reduction factor for buckling around the strong axis is smaller than the reduction factor for lateral flange buckling, e.g. in the case of many anti-sag bars, this failure mode should also be checked following clause 6.2.2 and 6.2.4.

Documento contenuto nel prodotto EUROCODICI edizione 2011. E' vietato l'uso in rete del singolo documento e la sua riproduzione. E' autorizzata la stampa per uso interno.

(2) The relative slenderness $\bar{\lambda}_{fz}$ for flexural buckling of the free flange should be determined from:

$$\bar{\lambda}_{fz} = \frac{l_{fz} / i_{fz}}{\lambda_1} \qquad \text{... (10.8)}$$

with:

$$\lambda_1 = \pi \left[E / f_{yb} \right]^{0,5}$$

where:

l_{fz} is the buckling length for the free flange from (3) to (7);

i_{fz} is the radius of gyration of the gross cross-section of the free flange plus the contributing part of the web for bending about the z-z axis, see 10.1.4.1(2).

(3) For gravity loading, provided that $0 \le R \le 200$, the buckling length of the free flange for a variation of the compressive stress over the length L as shown in figure 10.4 may be obtained from:

$$l_{fz} = \eta_1 L_a \left(1 + \eta_2 R^{\eta_3}\right)^{\eta_4} \qquad \text{... (10.9)}$$

where:

L_a is the distance between anti-sag bars, or if none are present, the span L of the purlin;

R is as given in 10.1.4.1(7);

and η_1 to η_4 are coefficients that depend on the number of anti-sag bars, as given in table 10.2a. The tables 10.2a and 10.2b are valid only for equal spans uniformly loaded beam systems without overlap or sleeve and with anti-sag bars that provide lateral rigid support for the free flange. The tables may be used for systems with sleeves and overlaps provided that the connection system may be considered as fully continuous. In other cases the buckling length should be determined by more appropriate calculations or, except cantilevers, the values of the table 10.2a for the case of 3 anti-sag bars per field may be used.

NOTE: Due to rotations in overlap or sleeve connection, the field moment may be much larger than without rotation which results also in longer buckling lengths in span. Neglecting the real moment distribution may lead to unsafe design.

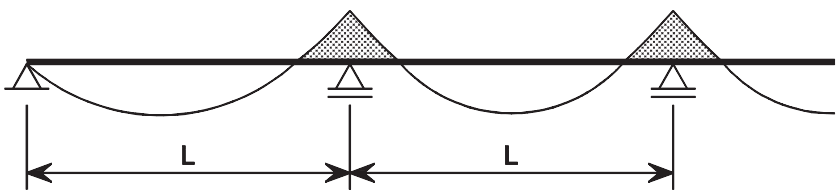

[Dotted areas show regions in compression]

Figure 10.4: Varying compressive stress in free flange for gravity load cases

Documento contenuto nel prodotto EUROCODICI edizione 2011. E' vietato l'uso in rete del singolo documento e la sua riproduzione. E' autorizzata la stampa per uso interno.

Table 10.2a : Coefficients η_i for down load with 0, 1, 2, 3, 4 anti-sag bars

Situation	Anti sag-bar Number	η_1	η_2	η_3	η_4
End span	0	0.414	1.72	1.11	-0.178
Intermediate span		0.657	8.17	2.22	-0.107
End span	1	0.515	1.26	0.868	-0.242
Intermediate span		0.596	2.33	1.15	-0.192
End and intermediate span	2	0.596	2.33	1.15	-0.192
End and intermediate span	3 and 4	0.694	5.45	1.27	-0.168

Table 10.2b : Coefficients η_i for uplift load with 0, 1, 2, 3, 4 anti-sag bars

Situation	Anti sag-bar Number	η_1	η_2	η_3	η_4
Simple span	0	0.694	5.45	1.27	-0.168
End span		0.515	1.26	0.868	-0.242
Intermediate span		0.306	0.232	0.742	-0.279
Simple and end spans	1	0.800	6.75	1.49	-0.155
Intermediate span		0.515	1.26	0.868	-0.242
Simple span	2	0.902	8.55	2.18	-0.111
End and intermediate spans		0.800	6.75	1.49	-0.155
Simple and end spans	3 and 4	0.902	8.55	2.18	-0.111
Intermediate span		0.800	6.75	1.49	-0.155

(4) For gravity loading, if there are more than three equally spaced anti-sag bars, and under conditions specified in (3), the buckling length need not be taken as greater than the value for two anti-sag bars, with $L_a = L/3$. This clause is valid only if there is no axial compressive force.

(5) If the compressive stress over the length L is almost constant, due to the application of a relatively large axial force, the buckling length should be determined using the values of η_i from table 10.2a for the case shown as more than three anti-sag bars per span, but the actual spacing L_a.

(6) For uplift loading, when anti-sag bars are not used, provided that $0 \le R_0 \le 200$, the buckling length of the free flange for variations of the compressive stress over the length L_0 as shown in figure 10.5, may be obtained from:

$$l_{fz} = 0{,}7\, L_0\, (1 + 13{,}1\, R_0^{1{,}6})^{-0{,}125} \qquad \text{... (10.10a)}$$

with:

$$R_0 = \frac{K\, L_0^4}{\pi^4\, E\, I_{fz}} \qquad \text{... (10.10b)}$$

in which I_{fz} and K are as defined in 10.1.4.1(7). Alternatively, the buckling length of the free flange may be determined using the table 10.2b in combination with the equation given in 10.1.4.2(3).

(7) For uplift loading, if the free flange is effectively held in position laterally at intervals by anti-sag bars, the buckling length may conservatively be taken as that for a uniform moment, determined as in (5).The formula (10.10a) may be applied under conditions specified in (3). If there are no appropriate calculations, reference should be made to 10.1.4.2(5).

Documento contenuto nel prodotto EUROCODICI edizione 2011. E' vietato l'uso in rete del singolo documento e la sua riproduzione. E' autorizzata la stampa per uso interno.

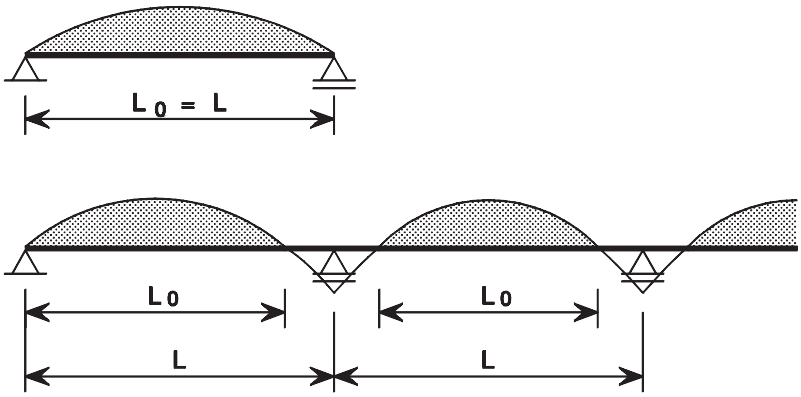

[Dotted areas show regions in compression]

Figure 10.5: Varying compressive stress in free flange for uplift cases

10.1.5 Rotational restraint given by the sheeting

10.1.5.1 Lateral spring stiffness

(1) The lateral spring support given to the free flange of the purlin by the sheeting should be modelled as a lateral spring acting at the free flange, see figure 10.1. The total lateral spring stiffness K per unit length should be determined from:

$$\frac{1}{K} = \frac{1}{K_A} + \frac{1}{K_B} + \frac{1}{K_C} \qquad \text{... (10.11)}$$

where:

K_A is the lateral stiffness corresponding to the rotational stiffness of the joint between the sheeting and the purlin;

K_B is the lateral stiffness due to distortion of the cross-section of the purlin;

K_C is the lateral stiffness due to the flexural stiffness of the sheeting.

(2) Normally it may be assumed to be safe as well as acceptable to neglect $1/K_C$ because K_C is very large compared to K_A and K_B. The value of K should then be obtained from:

$$K = \frac{1}{\left(1/K_A + 1/K_B\right)} \qquad \text{... (10.12)}$$

(3) The value of $(1/K_A + 1/K_B)$ may be obtained either by testing or by calculation.

NOTE: Appropriate testing procedures are given in Annex A.

Documento contenuto nel prodotto EUROCODICI edizione 2011. E' vietato l'uso in rete del singolo documento e la sua riproduzione. E' autorizzata la stampa per uso interno.

(4) The lateral spring stiffness K per unit length may be determined by calculation using:

$$\frac{1}{K} = \frac{4\,(1-\nu^2)\;h^2\;(h_d + b_{mod})}{E\,t^3} + \frac{h^2}{C_D} \qquad \text{... (10.13)}$$

in which the dimension b_{mod} is determined as follows:

- for cases where the equivalent lateral force $q_{h,Ed}$ bringing the purlin into contact with the sheeting at the purlin web:

$b_{mod} = a$

- for cases where the equivalent lateral force $q_{h,Ed}$ bringing the purlin into contact with the sheeting at the tip of the purlin flange:

$b_{mod} = 2a + b$

where:

t	is	the thickness of the purlin;
a	is	the distance from the sheet-to-purlin fastener to the purlin web, see figure 10.6;
b	is	the width of the purlin flange connected to the sheeting, see figure 10.6;
C_D	is	the total rotational spring stiffness from 10.1.5.2;
h	is	the overall height of the purlin;
h_d	is	the developed height of the purlin web, see figure 10.6.

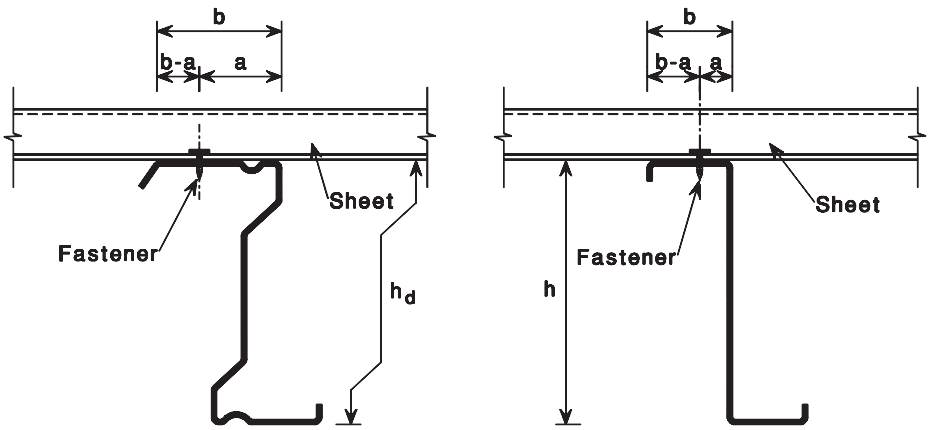

Figure 10.6: Purlin and attached sheeting

10.1.5.2 Rotational spring stiffness

(1) The rotational restraint given to the purlin by the sheeting that is connected to its top flange, should be modelled as a rotational spring acting at the top flange of the purlin, see figure 10.1. The total rotational spring stiffness C_D should be determined from:

$$C_D = \frac{1}{\left(1/C_{D,A} + 1/C_{D,C}\right)} \qquad \text{...(10.14)}$$

where:

$C_{D,A}$	is	the rotational stiffness of the connection between the sheeting and the purlin;
$C_{D,C}$	is	the rotational stiffness corresponding to the flexural stiffness of the sheeting.

Documento contenuto nel prodotto EUROCODICI edizione 2011. E' vietato l'uso in rete del singolo documento e la sua riproduzione. E' autorizzata la stampa per uso interno.

(2) Generally $C_{D,A}$ may be calculated as given in (5) and (7). Alternatively $C_{D,A}$ may be obtained by testing, see (9).

(3) The value of $C_{D,C}$ may be taken as the minimum value obtained from calculational models of the type shown in figure 10.7, taking account of the rotations of the adjacent purlins and the degree of continuity of the sheeting, using:

$$C_{D,C} = m/\theta \qquad \text{... (10.15)}$$

where:

m is the applied moment per unit width of sheeting, applied as indicated in figure 10.7;

θ is the resulting rotation, measured as indicated in figure 10.7 [radians].

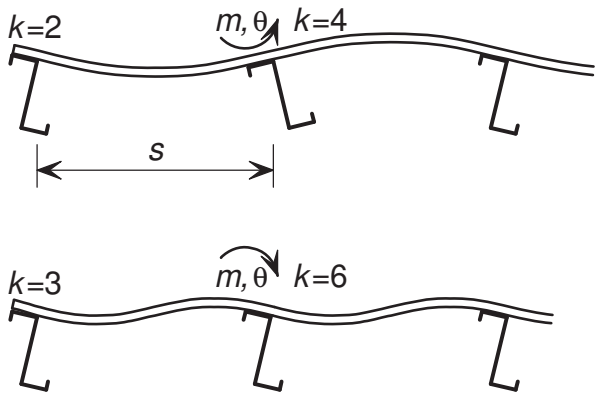

Figure 10.7: Model for calculating $C_{D,C}$

(4) Alternatively a conservative value of $C_{D,C}$ may be obtained from:

$$C_{D,C} = \frac{k\ E\ I_{eff}}{s} \qquad \text{... (10.16)}$$

in which k is a numerical coefficient, with values as follows:

- end, upper case of figure 10.7 $k = 2$;
- end, lower case of figure 10.7 $k = 3$;
- mid, upper case of figure 10.7 $k = 4$;
- mid, lower case of figure 10.7 $k = 6$;

where:

I_{eff} is the effective second moment of area per unit width of the sheeting;

s is the spacing of the purlins.

Documento contenuto nel prodotto EUROCODICI edizione 2011. E' vietato l'uso in rete del singolo documento e la sua riproduzione. E' autorizzata la stampa per uso interno.

(5) Provided that the sheet-to-purlin fasteners are positioned centrally on the flange of the purlin, the value of $C_{D,A}$ for trapezoidal sheeting connected to the top flange of the purlin may be determined as follows (see table 10.3):

$$C_{D,A} = C_{100} \cdot k_{ba} \cdot k_t \cdot k_{bR} \cdot k_A \cdot k_{bT} \qquad \ldots(10.17)$$

where

$k_{ba} = (b_a / 100)^2$ if $b_a < 125\text{mm}$;

$k_{ba} = 1{,}25(b_a / 100)$ if $125\text{mm} \le b_a < 200\text{mm}$;

$k_t = (t_{nom} / 0{,}75)^{1{,}1}$ if $t_{nom} \ge 0{,}75\text{mm}$; positive position;

$k_t = (t_{nom} / 0{,}75)^{1{,}5}$ if $t_{nom} \ge 0{,}75\text{mm}$; negative position;

$k_t = (t_{nom} / 0{,}75)^{1{,}5}$ if $t_{nom} < 0{,}75\text{mm}$;

$k_{bR} = 1{,}0$ if $b_R \le 185\text{mm}$;

$k_{bR} = 185 / b_R$ if $b_R > 185\text{mm}$;

for gravity load:

$k_A = 1{,}0 + (A - 1{,}0) \cdot 0{,}08$ if $t_{nom} = 0{,}75\text{mm}$; positive position;

$k_A = 1{,}0 + (A - 1{,}0) \cdot 0{,}16$ if $t_{nom} = 0{,}75\text{mm}$; negative position;

$k_A = 1{,}0 + (A - 1{,}0) \cdot 0{,}095$ if $t_{nom} = 1{,}00\text{mm}$; positive position;

$k_A = 1{,}0 + (A - 1{,}0) \cdot 0{,}095$ if $t_{nom} = 1{,}00\text{mm}$; negative position;

- linear interpolation between $t = 0{,}75$ and $t = 1{,}0$ mm is allowed
- for $t < 0.75$ mm the formula is not valid;
- for $t > 1$ mm, the formula needs to be used with $t = 1$ mm

for uplift load:

$k_A = 1{,}0$;

$k_{bT} = \sqrt{\dfrac{b_{T,max}}{b_T}}$ if $b_T > b_{T,max}$, otherwise $k_{bT} = 1$;

$A[\text{kN/m}] \le 12\text{kN/m}$ load introduced from sheeting to beam;

where:

b_a is the width of the purlin flange [in mm];

b_R is the corrugation width [in mm];

b_T is the width of the sheeting flange through which it is fastened to the purlin;

$b_{T,max}$ is given in Table 10.3;

C_{100} is a rotation coefficient, representing the value of $C_{D,A}$ if $b_a = 100$ mm.

(6) Provided that there is no insulation between the sheeting and the purlins, the value of the rotation coefficient C_{100} may be obtained from table 10.3.

Documento contenuto nel prodotto EUROCODICI edizione 2011. E' vietato l'uso in rete del singolo documento e la sua riproduzione. E' autorizzata la stampa per uso interno.

(7) Alternatively $C_{D,A}$ may be taken as equal to $130\,p$ [Nm/m/rad], where p is the number of sheet-to-purlin fasteners per metre length of purlin (but not more than one per rib of sheeting), provided that:

- the flange width b of the sheeting through which it is fastened does not exceed 120 mm;

- the nominal thickness t of the sheeting is at least 0,66 mm;

- the distance a or $b - a$ between the centreline of the fastener and the centre of rotation of the purlin (depending on the direction of rotation), as shown in figure 10.6, is at least 25 mm.

(8) If the effects of cross-section distortion have to be taken into account, see 10.1.5.1, it may be assumed to be realistic to neglect $C_{D,C,}$ because the spring stiffness is mainly influenced by the value of $C_{D,A}$ and the cross-section distortion.

(9) Alternatively, values of $C_{D,A}$ may be obtained from a combination of testing and calculation.

(10) If the value of $(1 / K_A + 1 / K_B)$ is obtained by testing (in *mm/N* in accordance with A.5.3(3)), the values of $C_{D,A}$ for gravity loading and for uplift loading should be determined from:

$$C_{D,A} = \frac{h^2 / l_A}{(1 / K_A + 1 / K_B) - 4\,(1 - \nu^2)\,h^2\,(h_d + b_{mod})/(E\,t^3\,l_B)} \qquad \text{... (10.18)}$$

in which b_{mod}, h and h_d are as defined in 10.1.5.1(4) and l_A is the modular width of tested sheeting and l_B is the length of tested beam.

NOTE: For testing see Annex A.5.3(3).

Documento contenuto nel prodotto EUROCODICI edizione 2011. E' vietato l'uso in rete del singolo documento e la sua riproduzione. E' autorizzata la stampa per uso interno.

Table 10.3: Rotation coefficient C_{100} for trapezoidal steel sheeting

Positioning of sheeting		Sheet fastened through		Pitch of fasteners		Washer diameter [mm]	C_{100}	$b_{T,max}$
Positive 1)	Negative1)	Trough	Crest	$e = b_R$	$e = 2b_R$		[kNm/m]	[mm]
For gravity loading:								
×		×		×		22	5,2	40
×		×			×	22	3,1	40
	×		×	×		K_a	10,0	40
	×		×		×	K_a	5,2	40
	×	×		×		22	3,1	120
	×	×			×	22	2,0	120
For uplift loading:								
×		×		×		16	2,6	40
×		×			×	16	1,7	40

Key:

b_R is the corrugation width;

b_T is the width of the sheeting flange through which it is fastened to the purlin.

K_a indicates a steel saddle washer as shown below with t ≥ 0,75 mm

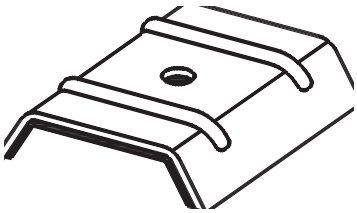

Sheet fastened:

- through the trough:

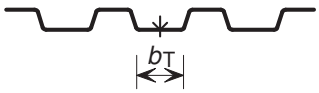

- through the crest:

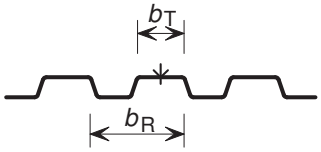

The values in this table are valid for:

- sheet fastener screws of diameter: ϕ = 6,3 mm;
- steel washers of thickness: $t_w \geq$ 1,0 mm.

1) The position of sheeting in positive when the narrow flange is on the purlin and negative when the wide flange is on the purlin.

Documento contenuto nel prodotto EUROCODICI edizione 2011. E' vietato l'uso in rete del singolo documento e la sua riproduzione. E' autorizzata la stampa per uso interno.

10.1.6 Forces in sheet/purlin fasteners and reaction forces

(1) Fasteners fixing the sheeting to the purlin should be checked for a combination of shear force $q_s\, e$, perpendicular to the flange, and tension force $q_t\, e$ where q_s and q_t may be calculated using table 10.4 and e is the pitch of the fasteners. Shear force due to stabilising effect, see EN1993-1-1, should be added to the shear force. Furthermore, shear force due to diaphragm action, acting parallel to the flange, should be vectorially added to q_s.

Table 10.4 Shear force and tensile force in fastener along the beam

Beam and loading	Shear force per unite length q_s	Tensile force per unit length q_t
Z-beam, gravity loading	$(1+\xi)k_h q_{Ed}$, may be taken as 0	0
Z-beam, uplift loading	$(1+\xi)(k_h - a/h)q_{Ed}$	$\lvert \xi k_h q_{Ed} h/a \rvert + q_{Ed}$ $\quad (a \cong b/2)$
C-beam, gravity loading	$(1-\xi)k_h q_{Ed}$	$\xi k_h q_{Ed} h/a$
C-beam, uplift loading	$(1-\xi)(k_h - a/h)q_{Ed}$	$\xi k_h q_{Ed} h/(b-a) + q_{Ed}$

(2) The fasteners fixing the purlins to the supports should be checked for the reaction force R_w in the plane of the web and the transverse reaction forces R_1 and R_2 in the plane of the flanges, see figure 10.8. Forces R_1 and R_2 may be calculated using table 10.5. Force R2 should also include loads parallel to the roof for sloped roofs. If R_1 is positive there is no tension force on the fastener. R_2 should be transferred from the sheeting to the top flange of the purlin and further on to the rafter (main beam) through the purlin/rafter connection (support cleat) or via special shear connectors or directly to the base or similar element. The reaction forces at an inner support of a continuous purlin may be taken as 2,2 times the values given in table 10.5.

NOTE: For sloped roofs the transversal loads to the purlins are the perpendicular (to the roof plane) components of the vertical loads and parallel components of the vertical loads are acting on the roof plane.

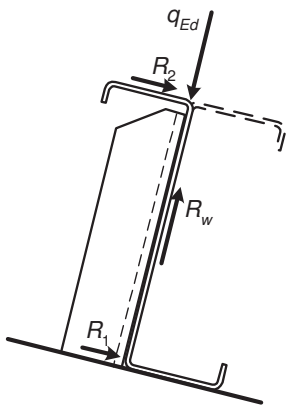

Figure 10.8: Reaction forces at support

Table 10.5 Reaction force at support for simply supported beam

Beam and loading	Reaction force on bottom flange R_1	Reaction force on top flange R_2
Z-beam, gravity loading	$(1-\varsigma)k_h q_{Ed} L/2$	$(1+\varsigma)k_h q_{Ed} L/2$
Z-beam, uplift loading	$-(1-\varsigma)k_h q_{Ed} L/2$	$-(1+\varsigma)k_h q_{Ed} L/2$
C-beam, gravity loading	$-(1-\varsigma)\, k_h q_{Ed} L/2$	$(1-\varsigma)\, k_h q_{Ed} L/2$
C-beam, uplift loading	$(1-\varsigma)\, k_h q_{Ed} L/2$	$-(1-\varsigma)\, k_h q_{Ed} L/2$

(3) The factor ζ may be taken as $\zeta = \sqrt[3]{\kappa_R}$, where κ_R = correction factor given in table 10.1, and the factor ξ may be taken as $\xi = \sqrt[3]{\zeta}$.

Documento contenuto nel prodotto EUROCODICI edizione 2011. E' vietato l'uso in rete del singolo documento e la sua riproduzione. E' autorizzata la stampa per uso interno.

10.2 Liner trays restrained by sheeting

10.2.1 General

(1) Liner trays should be large channel-type sections, with two narrow flanges, two webs and one wide flange, generally as shown in figure 10.9. The two narrow flanges should be laterally restrained by attached profiled steel sheeting.

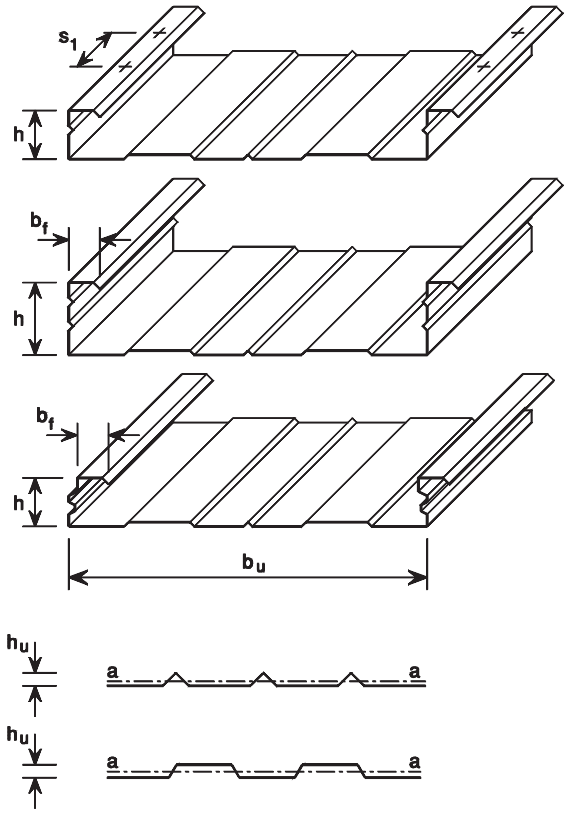

Figure 10.9: Typical geometry for liner trays

(2) The resistance of the webs of liner trays to shear forces and to local transverse forces should be obtained using 6.1.5 to 6.1.11, but using the value of $M_{c,Rd}$ given by (3) or (4).

(3) The moment resistance $M_{c,Rd}$ of a liner tray may be obtained using 10.2.2 provided that:

- the geometrical properties are within the range given in table 10.6;

- the depth h_u of the corrugations of the wide flange does not exceed $h/8$, where h is the overall depth of the liner tray.

(4) Alternatively the moment resistance of a liner tray may be determined by testing provided that it is ensured that the local behaviour of the liner tray is not affected by the testing equipment.

NOTE: Appropriate testing procedures are given in annex A.

Documento contenuto nel prodotto EUROCODICI edizione 2011. E' vietato l'uso in rete del singolo documento e la sua riproduzione. E' autorizzata la stampa per uso interno.

Table 10.6: Range of validity of 10.2.2

0,75 mm	≤	t_{nom}	≤	1,5 mm
30 mm	≤	b_f	≤	60 mm
60 mm	≤	h	≤	200 mm
300 mm	≤	b_u	≤	600 mm
		I_a / b_u	≤	10 mm^4 / mm
		s_1	≤	1000 mm

10.2.2 Moment resistance

10.2.2.1 Wide flange in compression

(1) The moment resistance of a liner tray with its wide flange in compression should be determined using the step-by-step procedure outlined in figure 10.10 as follows:

- **Step 1:** Determine the effective areas of all compression elements of the cross-section, based on values of the stress ratio $\psi = \sigma_2 / \sigma_1$ obtained using the effective widths of the compression flanges but the gross areas of the webs;
- **Step 2:** Find the centroid of the effective cross-section, then obtain the moment resistance $M_{c,Rd}$ from:

$$M_{c,Rd} = 0{,}8\, W_{eff,min} f_{yb} / \gamma_{M0} \qquad \text{... (10.19)}$$

with:

$$W_{eff,min} = I_{y,eff} / z_c \quad \text{but} \quad W_{eff,min} \leq I_{y,eff} / z_t;$$

where z_c and z_t are as indicated in figure 10.10.

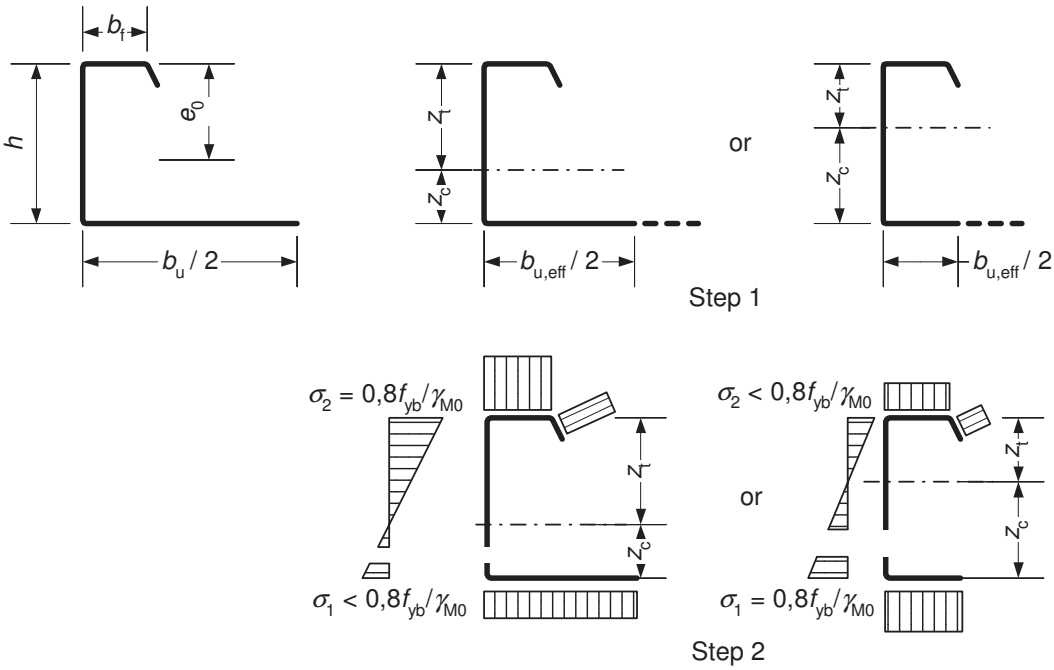

Figure 10.10: Determination of moment resistance — wide flange in compression

Documento contenuto nel prodotto EUROCODICI edizione 2011. E' vietato l'uso in rete del singolo documento e la sua riproduzione. E' autorizzata la stampa per uso interno.

10.2.2.2 Wide flange in tension

(1) The moment resistance of a liner tray with its wide flange in tension should be determined using the step-by-step procedure outlined in figure 10.11 as follows:

- **Step 1:** Locate the centroid of the gross cross-section;

- **Step 2:** Obtain the effective width of the wide flange $b_{u,eff}$, allowing for possible flange curling, from:

$$b_{u,eff} = \frac{53{,}3 \cdot 10^{10}\, e_o^{\,2}\, t^3\, t_{eq}}{h\, L\, b_u^{\,3}} \qquad \text{... (10.20)}$$

where:

b_u the overall width of the wide flange;

e_o the distance from the centroidal axis of the gross cross-section to the centroidal axis of the narrow flanges;

h the overall depth of the liner tray;

L the span of the liner tray;

t_{eq} the equivalent thickness of the wide flange, given by:

$$t_{eq} = (12\, I_a / b_u)^{1/3}$$

I_a the second moment of area of the wide flange, about its own centroid, see figure 10.9.

- **Step 3:** Determine the effective areas of all the compression elements, based on values of the stress ratio $\psi = \sigma_2 / \sigma_1$ obtained using the effective widths of the flanges but the gross areas of the webs;

- **Step 4:** Find the centroid of the effective cross-section, then obtain the buckling resistance moment $M_{b,Rd}$ using:

$$M_{b,Rd} = 0{,}8\, \beta_b\, W_{eff,com} f_{yb} / \gamma_{M0} \quad \text{but} \quad M_{b,Rd} \le 0{,}8\, W_{eff,t} f_{yb} / \gamma_{M0} \qquad \text{... (10.21)}$$

with:

$$W_{eff,com} = I_{y,eff} / z_c$$

$$W_{eff,t} = I_{y,eff} / z_t$$

in which the correlation factor β_b is given by the following:

- if $s_1 \le 300$ mm:

$$\beta_b = 1{,}0$$

- if $300 \text{ mm} \le s_1 \le 1000$ mm:

$$\beta_b = 1{,}15 - s_1 / 2000$$

where:

s_1 is the longitudinal spacing of fasteners supplying lateral restraint to the narrow flanges, see figure 10.9.

(2) The effects of shear lag need not be considered if $L / b_{u,eff} \ge 25$. Otherwise a reduced value of ρ should be determined as specified in 6.1.4.3.

Documento contenuto nel prodotto EUROCODICI edizione 2011. E' vietato l'uso in rete del singolo documento e la sua riproduzione. E' autorizzata la stampa per uso interno.

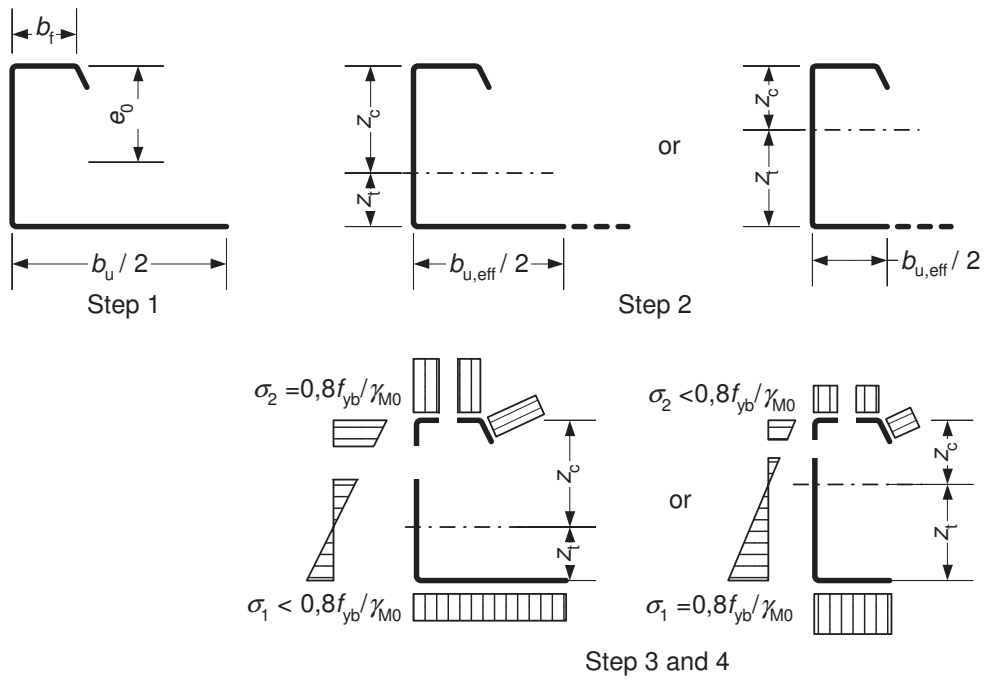

Figure 10.11: Determination of moment resistance — wide flange in tension

(3) Flange curling need not be taken into account in determining deflections at serviceability limit states.

(4) As a simplified alternative, the moment resistance of a liner tray with an unstiffened wide flange may be approximated by taking the same effective area for the wide flange in tension as for the two narrow flanges in compression combined.

10.3 Stressed skin design

10.3.1 General

(1) The interaction between structural members and sheeting panels that are designed to act together as parts of a combined structural system, may be allowed for as described in this clause 10.3.

(2) The provisions given in this clause should be applied only to sheet diaphragms that are made of steel.

(3) Diaphragms may be formed from profiled sheeting used as roof or wall cladding or for floors. They may also be formed from wall or roof structures based upon liner trays.

NOTE: Information on the verification of such diaphragms may be obtained from:

ECCS Publication No. 88 (1995): *European recommendations for the application of metal sheeting acting as a diaphragm*.

10.3.2 Diaphragm action

(1) In stressed skin design, advantage may be taken of the contribution that diaphragms of sheeting used as roofing, flooring or wall cladding make to the overall stiffness and strength of the structural frame, by means of their stiffness and strength in shear.

(2) Roofs and floors may be treated as deep plate girders extending throughout the length of a building, resisting transverse in-plane loads and transmitting them to end gables, or to intermediate stiffened frames. The panel of sheeting may be treated as a web that resists in-plane transverse loads in shear, with the edge members acting as flanges that resist axial tension and compression forces, see figures 10.12 and 10.13.

Documento contenuto nel prodotto EUROCODICI edizione 2011. E' vietato l'uso in rete del singolo documento e la sua riproduzione. E' autorizzata la stampa per uso interno.

(3) Similarly, rectangular wall panels may be treated as bracing systems that act as shear diaphragms to resist in-plane forces.

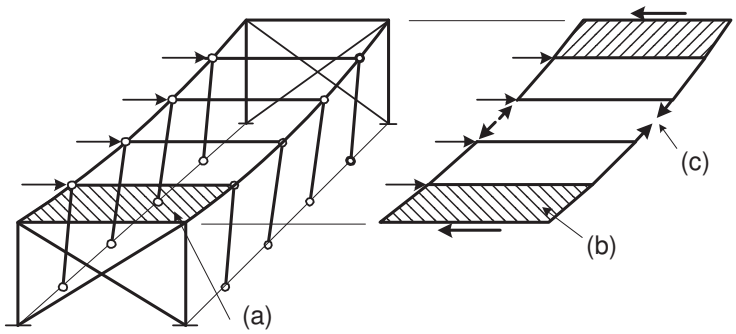

(a) Sheeting
(b) Shear field in sheeting
(c) Flange forces in edge members

Figure 10.12: Stressed skin action in a flat-roof building

10.3.3 Necessary conditions

(1) Methods of stressed skin design that utilize sheeting as an integral part of a structure, may be used only under the following conditions:

- the use made of the sheeting, in addition to its primary purpose, is limited to the formation of shear diaphragms to resist structural displacement in the plane of that sheeting;
- the diaphragms have longitudinal edge members to carry flange forces arising from diaphragm action;
- the diaphragm forces in the plane of a roof or floor are transmitted to the foundations by means of braced frames, further stressed-skin diaphragms, or other methods of sway resistance;
- suitable structural connections are used to transmit diaphragm forces to the main steel framework and to join the edge members acting as flanges;
- the sheeting is treated as a structural component that cannot be removed without proper consideration;
- the project specification, including the calculations and drawings, draws attention to the fact that the building is designed to utilize stressed skin action;
- in sheeting with the corrugation oriented in the longitudinal direction of the roof the flange forces due to diaphragm action may be taken up by the sheeting.

(2) Stressed skin design may be used predominantly in low-rise buildings, or in the floors and facades of high-rise buildings.

(3) Stressed skin diaphragms may be used predominantly to resist wind loads, snow loads and other loads that are applied through the sheeting itself. They may also be used to resist small transient loads, such as surge from light overhead cranes or hoists on runway beams, but may not be used to resist permanent external loads, such as those from plant.

Documento contenuto nel prodotto EUROCODICI edizione 2011. E' vietato l'uso in rete del singolo documento e la sua riproduzione. E' autorizzata la stampa per uso interno.

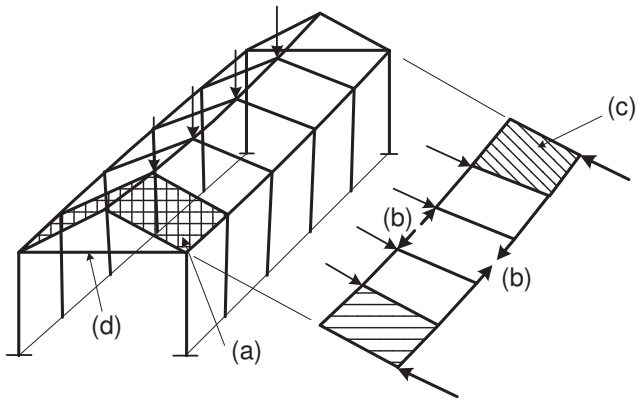

(a) Sheeting

(b) Flange forces in edge members

(c) Shear field in sheeting

(d) Gable tie required to resist forces in roof sheeting

Figure 10.13: Stressed skin action in a pitched roof building

10.3.4 Profiled steel sheet diaphragms

(1) In a profiled steel sheet diaphragm, see figure 10.14, both ends of the sheets should be attached to the supporting members by means of self-tapping screws, cartridge fired pins, welding, bolts or other fasteners of a type that will not work loose in service, pull out, or fail in shear before causing tearing of the sheeting. All such fasteners should be fixed directly through the sheeting into the supporting member, for example through the troughs of profiled sheets, unless special measures are taken to ensure that the connections effectively transmit the forces assumed in the design.

(2) The seams between adjacent sheets should be fastened by rivets, self-drilling screws, welds, or other fasteners of a type that will not work loose in service, pull out, or fail in shear before causing tearing of the sheeting. The spacing of such fasteners should not exceed 500 mm.

(3) The distances from all fasteners to the edges and ends of the sheets should be adequate to prevent premature tearing of the sheets.

(4) Small randomly arranged openings, up to 3% of the relevant area, may be introduced without special calculation, provided that the total number of fasteners is not reduced. Openings up to 15% of the relevant area (the area of the surface of the diaphragm taken into account for the calculations) may be introduced if justified by detailed calculations. Areas that contain larger openings should be split into smaller areas, each with full diaphragm action.

(5) All sheeting that also forms part of a stressed-skin diaphragm should first be designed for its primary purpose in bending. To ensure that any deterioration of the sheeting would be apparent in bending before the resistance to stressed skin action is affected, it should then be verified that the shear stress due to diaphragm action does not exceed $0{,}25 f_{yb}/\gamma_{M1}$.

(6) The shear resistance of a stressed-skin diaphragm should be based on the least tearing strength of the seam fasteners or the sheet-to-member fasteners parallel to the corrugations or, for diaphragms fastened only to longitudinal edge members, the end sheet-to-member fasteners. The calculated shear resistance for any other type of failure should exceed this minimum value by at least the following:

- for failure of the sheet-to-purlin fasteners under combined shear and wind uplift, by at least 40%;

- for any other type of failure, by at least 25%.

Documento contenuto nel prodotto EUROCODICI edizione 2011. E' vietato l'uso in rete del singolo documento e la sua riproduzione. E' autorizzata la stampa per uso interno.

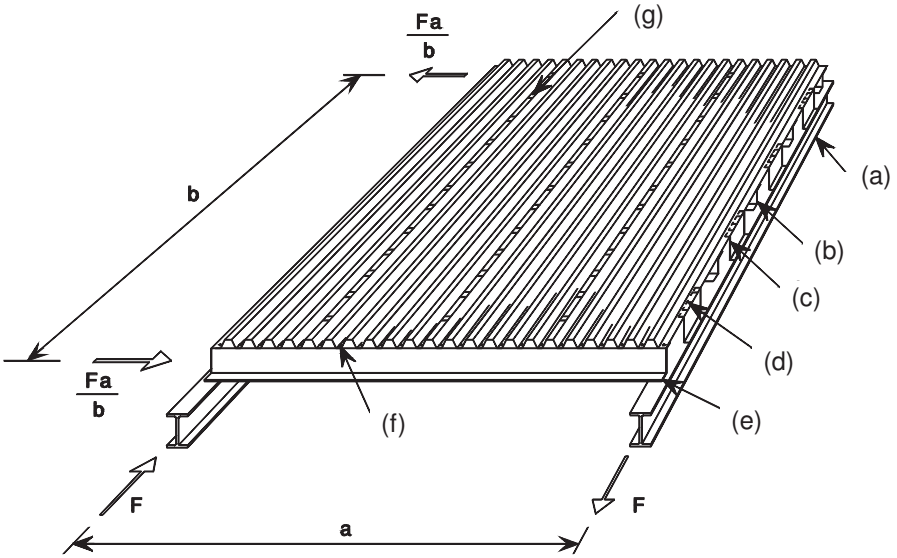

(a) Rafter
(b) Purlin
(c) Shear connector
(d) Sheet-to-shear connector fastener
(e) Purlin
(f) Sheet-to-purlin fastener
(g) Seam fastener

Figure 10.14: Arrangement of an individual panel

10.3.5 Steel liner tray diaphragms

(1) Liner trays used to form shear diaphragms should have stiffened wide flanges.

(2) Liner trays in shear diaphragms should be inter-connected by seam fasteners through the web at a spacing e_s of not more than 300 mm by seam fasteners (normally blind rivets) located at a distance e_u from the wide flange of not more than 30 mm, all as shown in figure 10.15.

(3) An accurate evaluation of deflections due to fasteners may be made using a similar procedure to that for trapezoidal profiled sheeting.

(4) The shear flow $T_{v,Ed}$ due to ultimate limit states design loads should not exceed $T_{v,Rd}$ given by:

$$T_{V,Rd} = 8{,}43\ E \sqrt[4]{I_a \left(t / b_u\right)^9} \qquad \text{... (10.22)}$$

where:

I_a is the second moment of area of the wide flange about it own centroid, see figure 10.9;

b_u is the overall width of the wide flange.

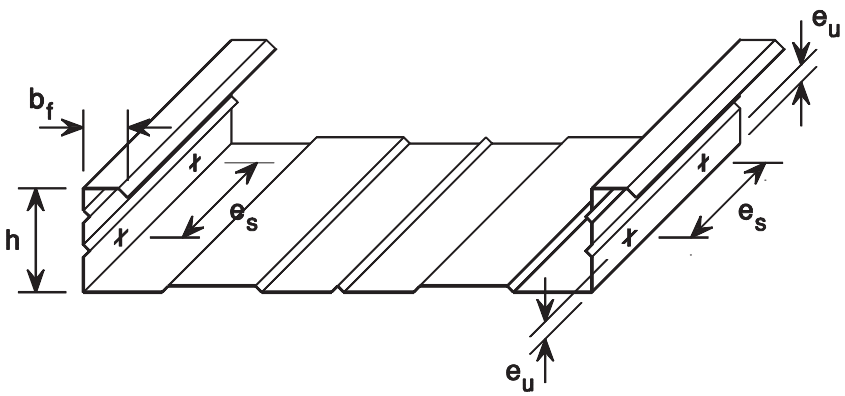

Figure 10.15: Location of seam fasteners

Documento contenuto nel prodotto EUROCODICI edizione 2011. E' vietato l'uso in rete del singolo documento e la sua riproduzione. E' autorizzata la stampa per uso interno.

(5) The shear flow $T_{v,ser}$ due to serviceability design loads should not exceed $T_{v,Cd}$ given by:

$$T_{v,Cd} = S_v / 375 \qquad \ldots(10.23)$$

where:

S_v is the shear stiffness of the diaphragm, per unit length of the span of the liner trays.

(6) The shear stiffness S_v per unit length may be obtained from:

$$S_V = \frac{\alpha\, L\, b_u}{e_s\,(b - b_u)} \qquad \ldots (10.24)$$

where:

L is the overall length of the shear diaphragm (in the direction of the span of the liner trays);

b is the overall width of the shear diaphragm ($b = \Sigma\, b_u$);

α is the stiffness factor.

(7) The stiffness factor α may be conservatively be taken as equal to 2000 N/mm unless more accurate values are derived from tests.

10.4 Perforated sheeting

(1) Perforated sheeting with the holes arranged in the shape of equilateral triangles may be designed by calculation, provided that the rules for non-perforated sheeting are modified by introducing the effective thicknesses given below.

NOTE: These calculation rules tend to give rather conservative values. More economical solutions might be obtained from design assisted by testing, see Section 9.

(2) Provided that $0{,}2 \le d/a \le 0{,}9$ gross section properties may be calculated using 5.1, but replacing t by $t_{a,eff}$ obtained from:

$$t_{a,eff} = 1{,}18\, t \left(1 - \frac{d}{0{,}9a}\right) \qquad \ldots (10.25)$$

where:

d is the diameter of the perforations;

a is the spacing between the centres of the perforations.

(3) Provided that $0{,}2 \le d/a \le 0{,}9$ effective section properties may be calculated using Section 5, but replacing t by $t_{b,eff}$ obtained from:

$$t_{b,eff} = t \sqrt[3]{1{,}18\,(1 - d/a)} \qquad \ldots (10.26)$$

(4) The resistance of a single web to local transverse forces may be calculated using 6.1.9, but replacing t by $t_{c,eff}$ obtained from:

$$t_{c,eff} = t \left[1 - (d/a)^2\, s_{per}/s_w\right]^{3/2} \qquad \ldots (10.27)$$

where:

s_{per} is the slant height of the perforated portion of the web;

s_w is the total slant height of the web.

Documento contenuto nel prodotto EUROCODICI edizione 2011. E' vietato l'uso in rete del singolo documento e la sua riproduzione. E' autorizzata la stampa per uso interno.

Annex A [normative] –Testing procedures

A.1 General

(1) This annex A gives appropriate standardized testing and evaluation procedures for a number of tests that are required in design.

NOTE 1: In the field of cold-formed members and sheeting, many standard products are commonly used for which design by calculation might not lead to economical solutions, so it is frequently desirable to use design assisted by testing.

NOTE 2: The National Annex may give further information on testing.

NOTE 3: The National Annex may give conversion factors for existing test results to be equivalent to the outcome of standardised tests according to this annex.

(2) This annex covers:

- tests on profiled sheets and liner trays, see A.2;
- tests on cold-formed members, see A.3;
- tests on structures and portions of structures, see A.4;
- tests on torsionally restrained beams, see A.5;
- evaluation of test results to determine design values, see A.6.

A.2 Tests on profiled sheets and liner trays

A.2.1 General

(1) Although these test procedures are presented in terms of profiled sheets, similar test procedures based on the same principles may also be used for liner trays and other types of sheeting (e.g. sheeting mentioned in EN 508).

(2) Loading may be applied through air bags or in a vacuum chamber or by steel or timber cross beams arranged to approximate uniformly distributed loading.

(3) To prevent spreading of corrugations, transverse ties or other appropriate test accessories such as timber blocks may be applied to the test specimen. Some examples are given in figure A.1.

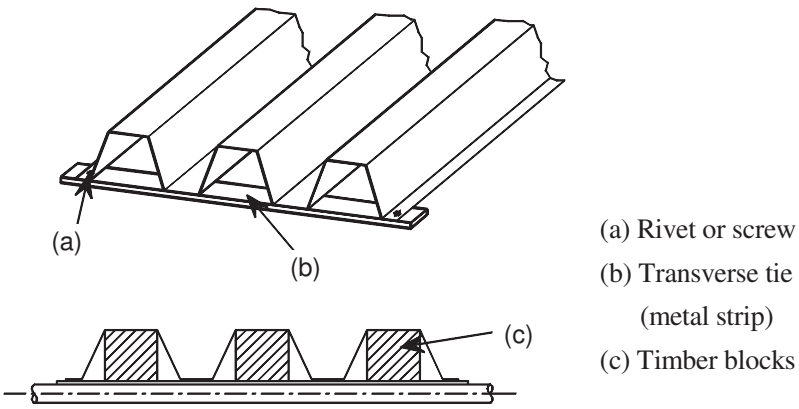

Figure A.1: Examples of appropriate test accessories

Documento contenuto nel prodotto EUROCODICI edizione 2011. E' vietato l'uso in rete del singolo documento e la sua riproduzione. E' autorizzata la stampa per uso interno.

(4) For uplift tests, the test set-up should realistically simulate the behaviour of the sheeting under practical conditions. The type of connections between the sheet and the supports should be the same as in the connections to be used in practice.

(5) To give the results a wide range of applicability, hinged and roller supports should preferably be used, to avoid any influence of rotational restraint at the supports on the test results.

(6) It should be ensured that the direction of the loading remains perpendicular to the initial plane of the sheet throughout the test procedure.

(7) To eliminate the deformations of the supports, the deflections at both ends of the test specimen should also be measured.

(8) The test result should be taken as the maximum value of the loading applied to the specimen either coincident with failure or immediately prior to failure as appropriate.

A.2.2 Single span test

(1) A test set-up equivalent to that shown in figure A.2 may be used to determine the midspan moment resistance (in the absence of shear force) and the effective flexural stiffness.

(2) The span should be chosen such that the test results represent the moment resistance of the sheet.

(3) The moment resistance should be determined from the test result.

(4) The flexural stiffness should be determined from a plot of the load-deflection behaviour.

A.2.3 Double span test

(1) The test set-up shown in figure A.3 may be used to determine the resistance of a sheet that is continuous over two or more spans to combinations of moment and shear at internal supports, and its resistance to combined moment and support reaction for a given support width.

(2) The loading should preferably be uniformly distributed (applied using an air bag or a vacuum chamber, for example).

(3) Alternatively any number of line loads (transverse to the span) may be used, arranged to produce internal moments and forces that are appropriate to represent the effects of uniformly distributed loading. Some examples of suitable arrangements are shown in figure A.4.

A.2.4 Internal support test

(1) As an alternative to A.2.3, the test set-up shown in figure A.5 may be used to determine the resistance of a sheet that is continuous over two or more spans to combinations of moment and shear at internal supports, and its resistance to combined moment and support reaction for a given support width.

(2) The test span s used to represent the portion of the sheet between the points of contraflexure each side of the internal support, in a sheet continuous over two equal spans L may be obtained from:

$$s = 0{,}4\,L \qquad \text{... (A.1)}$$

(3) If plastic redistribution of the support moment is expected, the test span s should be reduced to represent the appropriate ratio of support moment to shear force.

Documento contenuto nel prodotto EUROCODICI edizione 2011. E' vietato l'uso in rete del singolo documento e la sua riproduzione. E' autorizzata la stampa per uso interno.

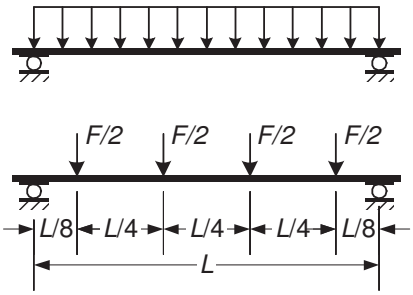

a) Uniformly distributed loading and an example of alternative equivalent line loads

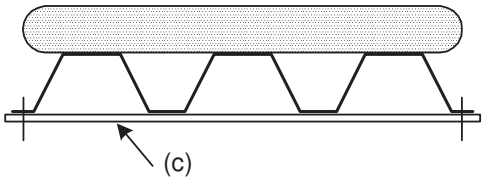

b) Distributed loading applied by an airbag (alternatively by a vacuum test rig)

(c) Transverse tie

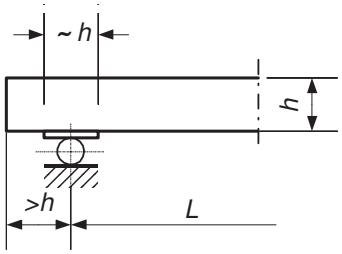

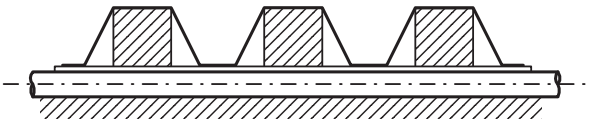

c) Example of support arrangements for preventing distortion

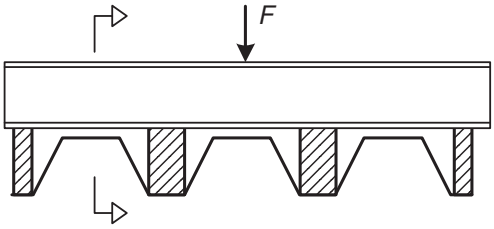

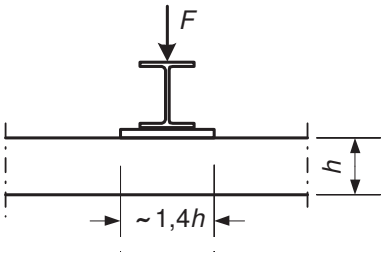

d) Example of method of applying a line load

Figure A.2: Test set-up for single span tests

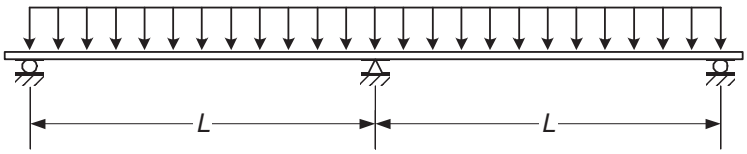

Figure A.3: Test setup for double span tests

Documento contenuto nel prodotto EUROCODICI edizione 2011. E' vietato l'uso in rete del singolo documento e la sua riproduzione. E' autorizzata la stampa per uso interno.

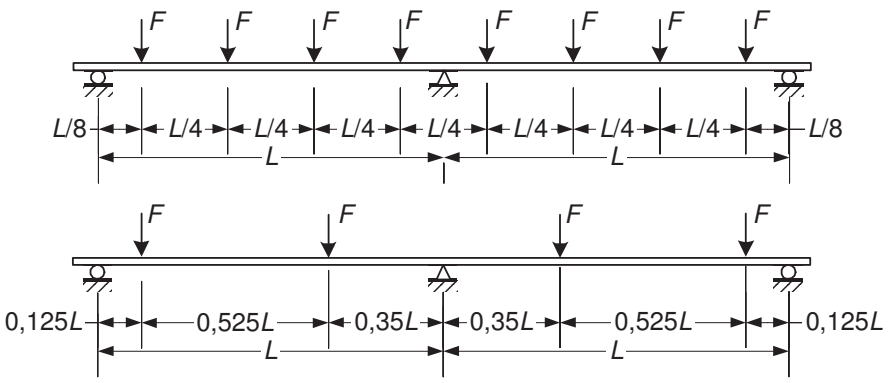

Figure A.4: Examples of suitable arrangements of alternative line loads

(4) The width b_B of the beam used to apply the test load should be selected to represent the actual support width to be used in practice.

(5) Each test result may be used to represent the resistance to combined bending moment and support reaction (or shear force) for a given span and a given support width. To obtain information about the interaction of bending moment and support reaction, tests should be carried out for several different spans.

(6) Interpretation of test results, see A.5.2.3.

A.2.5 End support test

(1) The test set-up shown in figure A.6 may be used to determine the shear resistance of a sheet at an end support.

(2) Separate tests should be carried out to determine the shear resistance of the sheet for different lengths u from the contact point at the inner edge of the end support, to the actual end of the sheet, see figure A.6.

NOTE: Value of maximum support reaction measured during a bending test may be used as a lower bound for section resistance to both shear and local transverse force.

Documento contenuto nel prodotto EUROCODICI edizione 2011. E' vietato l'uso in rete del singolo documento e la sua riproduzione. E' autorizzata la stampa per uso interno.

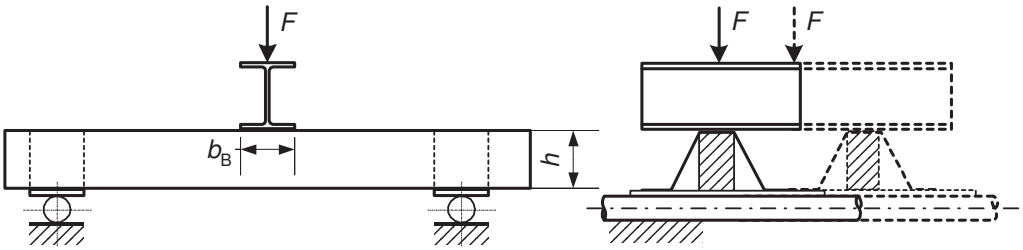

a) Internal support under gravity loading

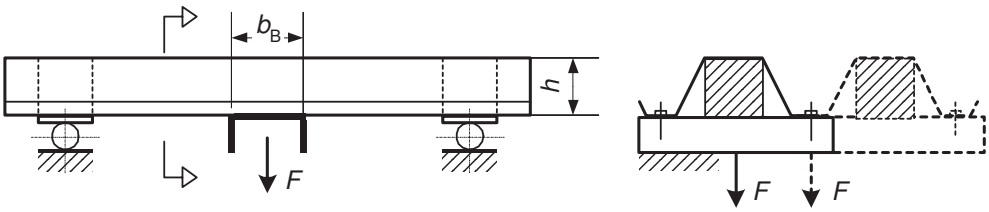

b) Internal support under uplift loading

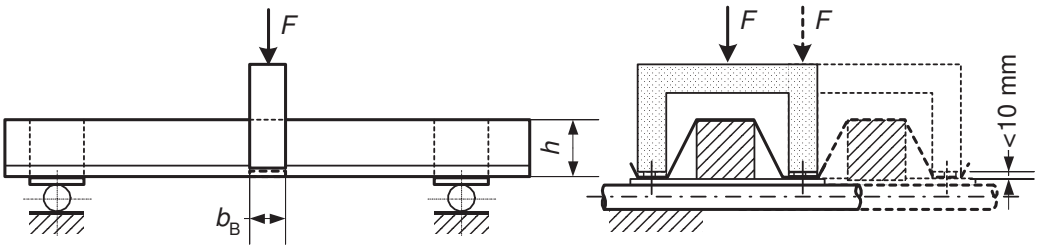

c) Internal support with loading applied to tension flange

Figure A.5: Test set-up for internal support test

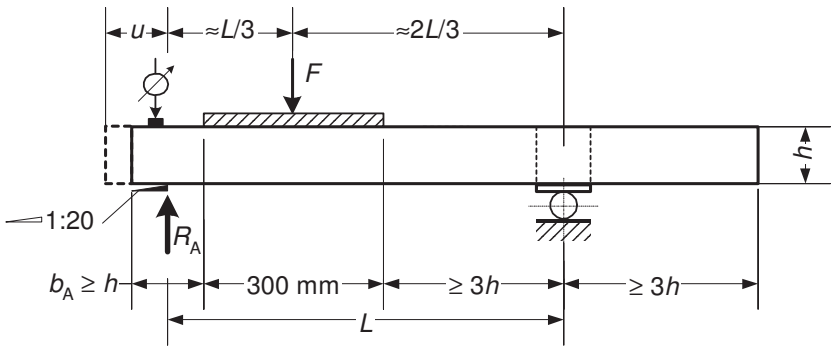

Key:

b_A = support length

u = length from internal edge of end support to end of sheet

Figure A.6: Test set-up for end support tests

Documento contenuto nel prodotto EUROCODICI edizione 2011. E' vietato l'uso in rete del singolo documento e la sua riproduzione. E' autorizzata la stampa per uso interno.

A.3 Tests on cold-formed members

A.3.1 General

(1) Each test specimen should be similar in all respects to the component or structure that it represents.

(2) The supporting devices used for tests should preferably provide end conditions that closely reproduce those supplied by the connections to be used in service. Where this cannot be achieved, less favourable end conditions that decrease the load carrying capacity or increase the flexibility should be used, as relevant.

(3) The devices used to apply the test loads should reproduce the way that the loads would be applied in service. It should be ensured that they do not offer more resistance to transverse deformations of the cross-section than would be available in the event of an overload in service. It should also be ensured that they do not localize the applied forces onto the lines of greatest resistance.

(4) If the given load combination includes forces on more than one line of action, each increment of the test loading should be applied proportionately to each of these forces.

(5) At each stage of the loading, the displacements or strains should be measured at one or more principal locations on the structure. Readings of displacements or strains should not be taken until the structure has completely stabilized after a load increment.

(6) Failure of a test specimen should be considered to have occurred in any of the following cases:

- at collapse or fracture;
- if a crack begins to spread in a vital part of the specimen;
- if the displacement is excessive.

(7) The test result should be taken as the maximum value of the loading applied to the specimen either coincident with failure or immediately prior to failure as appropriate.

(8) The accuracy of all measurements should be compatible with the magnitude of the measurement concerned and should in any case not exceed $\pm 1\%$ of the value to be determined. The following magnitudes (in clause (9)) must also be fulfilled.

(9) The measurements of the cross-sectional geometry of the test specimen should include:

- the overall dimensions (width, depth and length) to an accuracy of $\pm 1{,}0$ mm;
- widths of plane elements of the cross-section to an accuracy of $\pm 1{,}0$ mm;
- radii of bends to an accuracy of $\pm 1{,}0$ mm;
- inclinations of plane elements to an accuracy of $\pm 2{,}0°$;
- angles between flat surfaces to an accuracy of $\pm 2{,}0°$;
- locations and dimensions of intermediate stiffeners to an accuracy of $\pm 1{,}0$ mm;
- the thickness of the material to an accuracy of $\pm 0{,}01$ mm;
- accuracy of all measurements of the cross-section has to be taken as equal to maximum 0,5 % of the nominal values.

(10) All other relevant parameters should also be measured, such as:

- locations of components relative to each other;
- locations of fasteners;
- the values of torques etc. used to tighten fasteners.

Documento contenuto nel prodotto EUROCODICI edizione 2011. E' vietato l'uso in rete del singolo documento e la sua riproduzione. E' autorizzata la stampa per uso interno.

A.3.2 Full cross-section compression tests

A.3.2.1 Stub column test

(1) Stub column tests may be used to allow for the effects of local buckling in thin gauge cross-sections, by determining the value of the ratio $\beta_A = A_{eff}/A_g$ and the location of the effective centroidal axis.

(2) If local buckling of the plane elements governs the resistance of the cross-section, the specimen should have a length of at least 3 times the width of the widest plate element.

(3) The lengths of specimens with perforated cross-sections should include at least 5 pitches of the perforations, and should be such that the specimen is cut to length midway between two perforations.

(4) In the case of a cross-section with edge or intermediate stiffeners, it should be ensured that the length of the specimen is not less than the expected buckling lengths of the stiffeners.

(5) If the overall length of the specimen exceeds 20 times the least radius of gyration of its gross cross-section i_{min}, intermediate lateral restraints should be supplied at a spacing of not more than $20\, i_{min}$.

(6) Before testing, the tolerances of the cross-sectional dimensions of the specimen should be checked to ensure that they are within the permitted deviations.

(7) The cut ends of the specimen should be flat, and should be perpendicular to its longitudinal axis.

(8) An axial compressive force should be applied to each end of the specimen through pressure pads at least 30 mm thick, that protrude at least 10 mm beyond the perimeter of the cross-section.

(9) The test specimen should be placed in the testing machine with a ball bearing at each end. There should be small drilled indentations in the pressure pads to receive the ball bearings. The ball bearings should be located in line with the centroid of the calculated effective cross-section. If the calculated location of this effective centroid proves not to be correct, it may be adjusted within the test series.

(10) In the case of open cross-sections, possible spring-back may be corrected.

(11) Stub column tests may be used to determine the compression resistance of a cross-section. In interpreting the test results, the following parameters should be treated as variables:

- the thickness;
- the ratio b_p/t;
- the ratio f_u/f_{yb};
- the ultimate strength f_u and the yield strength f_{yb};
- the location of the centroid of the effective cross-section;
- imperfections in the shape of the elements of the cross-section;
- the method of cold forming (for example increasing the yield strength by introducing a deformation that is subsequently removed).

A.3.2.2 Member buckling test

(1) Member buckling tests may be used to determine the resistance of compression members with thin gauge cross-sections to overall buckling (including flexural buckling, torsional buckling and torsional-flexural buckling) and the interaction between local buckling and overall buckling.

(2) The method of carrying out the test should be generally as given for stub column tests in A.3.2.1.

(3) A series of tests on axially loaded specimens may be used to determine the appropriate buckling curve for a given type of cross-section and a given grade of steel, produced by a specific process. The values of relative slenderness $\bar{\lambda}$ to be tested and the minimum number of tests n at each value, should be as given in table A.1.

Documento contenuto nel prodotto EUROCODICI edizione 2011. E' vietato l'uso in rete del singolo documento e la sua riproduzione. E' autorizzata la stampa per uso interno.

Table A.1: Relative slenderness values and numbers of tests

$\bar{\lambda}$	0,2	0,5	0,7	1,0	1,3	1,6	2,0	3,0
N	3	5	5	5	5	5	5	5

(4) Similar tests may also be used to determine the effect of introducing intermediate restraints on the torsional buckling resistance of a member.

(5) For the interpretation of the test results the following parameters should be taken into account:

- the parameters listed for stub column tests in A.3.2.1(11);
- overall lack of straightness imperfections compared to standard production output, see (6);
- type of end or intermediate restraint (flexural, torsional or both).

(6) Overall lack of straighness may be taken into account as follows:

a) Determine the elastic critical compression load of the member by an appropriate analysis with initial bow equal to test sample: $F_{cr,bow,test}$

b) As a) but with an initial bow equal to the maximum allowed according to the product specification: $F_{cr,bow,max,nom}$

c) Additional correction factor: $F_{cr,bow,max,nom} / F_{cr,bow,test}$

A.3.3 Full cross-section tension test

(1) This test may be used to determine the average yield strength f_{ya} of the cross-section.

(2) The specimen should have a length of at least 5 times the width of the widest plane element in the cross-section.

(3) The load should be applied through end supports that ensure a uniform stress distribution across the cross-section.

(4) The failure zone should occur at a distance from the end supports of not less than the width of the widest plane element in the cross-section.

A.3.4 Full cross-section bending test

(1) This test may be used to determine the moment resistance and rotation capacity of a cross-section.

(2) The specimen should have a length of at least 15 times its greatest transversal dimension. The spacing of lateral restraints to the compression flange should not be less than the spacing to be used in service.

(3) A pair of point loads should be applied to the specimen to produce a length under uniform bending moment at midspan of at least $0{,}2 \times$ (span) but not more than $0{,}33 \times$ (span). These loads should be applied through the shear centre of the cross-section. The section should be torsionally restrained at the load points. If necessary, local buckling of the specimen should be prevented at the points of load application, to ensure that failure occurs within the central portion of the span. The deflection should be measured at the load positions, at midspan and at the ends of the specimen.

Documento contenuto nel prodotto EUROCODICI edizione 2011. E' vietato l'uso in rete del singolo documento e la sua riproduzione. E' autorizzata la stampa per uso interno.

(4) In interpreting the test results, the following parameters should be treated as variables:

- the thickness;
- the ratio b_p / t;
- the ratio f_u / f_{yb};
- the ultimate strength f_u and the yield strength f_{yb};
- differences between restraints used in the test and those available in service;
- the support conditions.

A.4 Tests on structures and portions of structures

A.4.1 Acceptance test

(1) This acceptance test may be used as a non-destructive test to confirm the structural performance of a structure or portion of a structure.

(2) The test load for an acceptance test should be taken as equal to the sum of:

- 1,0 × (the actual self-weight present during the test);
- 1,15 × (the remainder of the permanent load);
- 1,25 × (the variable loads).

but need not be taken as more than the mean of the total ultimate limit state design load and the total serviceability limit state design load for the characteristic (rare) load combination.

(3) Before carrying out the acceptance test, preliminary bedding down loading (not exceeding the characteristic values of the loads) may optionally be applied, and then removed.

(4) The structure should first be loaded up to a load equal to the total characteristic load. Under this load it should demonstrate substantially elastic behaviour. On removal of this load the residual deflection should not exceed 20% of the maximum recorded. If these criteria are not satisfied this part of the test procedure should be repeat. In this repeat load cycle, the structure should demonstrate substantially linear behaviour up to the characteristic load and the residual deflection should not exceed 10% of the maximum recorded.

(5) During the acceptance test, the loads should be applied in a number of regular increments at regular time intervals and the principal deflections should be measured at each stage. When the deflections show significant non-linearity, the load increments should be reduced.

(6) On the attainment of the acceptance test load, the load should be maintained for being no changes between a set of adjacent readings and deflection measurements should be taken to establish whether the structure is subject to any time-dependent deformations, such as deformations of fasteners or deformations arising from creep in the zinc layer.

(7) Unloading should be completed in regular decrements, with deflection readings taken at each stage.

(8) The structure should prove capable of sustaining the acceptance test load, and there should be no significant local distortion or defects likely to render the structure unserviceable after the test.

A.4.2 Strength test

(1) This strength test may be used to confirm the calculated load carrying capacity of a structure or portion of a structure. Where a number of similar items are to be constructed to a common design and one or more prototypes have been submitted to and met all the requirements of this strength test, the others may be accepted without further testing provided that they are similar in all relevant respects to the prototypes.

(2) Before carrying out a strength test the specimen should first pass the acceptance test detailed in A.4.1.

Documento contenuto nel prodotto EUROCODICI edizione 2011. E' vietato l'uso in rete del singolo documento e la sua riproduzione. E' autorizzata la stampa per uso interno.

(3) The load should then be increased in increments up to the strength test load and the principal deflections should be measured at each stage. The strength test load should be maintained for at least one hour and deflection measurements should be taken to establish whether the structure is subject to creep.

(4) Unloading should be completed in regular decrements with deflection readings taken at each stage.

(5) The total test load (including self-weight) for a strength test F_{str} should be determined from the total design load F_{Ed} specified for ultimate limit state verifications by calculation, using:

$$F_{str} = \gamma_{Mi} \mu_F F_{Ed} \qquad \text{... (A.2)}$$

in which μ_F is the load adjustment coefficient and γ_{Mi} is the partial coefficient of the ultimate limit state.

(6) The load adjustment coefficient μ_F should take account of variations in the load carrying capacity of the structure, or portion of a structure, due to the effects of variation in the material yield strength, local buckling, overall buckling and any other relevant parameters or considerations.

(7) Where a realistic assessment of the load carrying capacity of the structure, or portion of a structure, may be made using the provisions of this Part 1-3 of EN 1993 for design by calculation, or another proven method of analysis that takes account of all buckling effects, the load adjustment coefficient μ_F may be taken as equal to the ratio of (the value of the assessed load carrying capacity based on the averaged basic yield strength f_{ym}) compared to (the corresponding value based on the nominal basic yield strength f_{yb}).

(8) The value of f_{ym} should be determined from the measured basic strength $f_{yb,obs}$ of the various components of the structure, or portion of a structure, with due regard to their relative importance.

(9) If realistic theoretical assessments of the load carrying capacity cannot be made, the load adjustment coefficient μ_F should be taken as equal to the resistance adjustment coefficient μ_R defined in A.6.2.

(10) Under the test load there should be no failure by buckling or rupture in any part of the specimen.

(11) On removal of the test load, the deflection should be reduced by at least 20%.

A.4.3 Prototype failure test

(1) A test to failure may be used to determine the real mode of failure and the true load carrying capacity of a structure or assembly. If the prototype is not required for use, it may optionally be used to obtain this additional information after completing the strength test described in A.4.2.

(2) Alternatively a test to failure may be carried out to determine the true design load carrying capacity from the ultimate test load. As the acceptance and strength test procedures should preferably be carried out first, an estimate should be made of the anticipated design load carrying capacity as a basis for such tests.

(3) Before carrying out a test to failure, the specimen should first pass the strength test described in A.4.2. Its estimated design load carrying capacity may then be adjusted based on its behaviour in the strength test.

(4) During a test to failure, the loading should first be applied in increments up to the strength test load. Subsequent load increments should then be based on an examination of the plot of the principal deflections.

(5) The ultimate load carrying capacity should be taken as the value of the test load at that point at which the structure or assembly is unable to sustain any further increase in load.

NOTE: At this point gross permanent distortion is likely to have occurred. In some cases gross deformation might define the test limit.

A.4.4 Calibration test

(1) A calibration test may be used to:

- verify load bearing behaviour relative to analytical design models;
- quantify parameters derived from design models, such as strength or stiffness of members or joints.

Documento contenuto nel prodotto EUROCODICI edizione 2011. E' vietato l'uso in rete del singolo documento e la sua riproduzione. E' autorizzata la stampa per uso interno.

A.5 Tests on torsionally restrained beams

A.5.1 General

(1) These test procedures may be used for beams that are partially restrained against torsional displacement, by means of trapezoidal profiled steel sheeting or other suitable cladding.

(2) These procedures may be used for purlins, side rails, floor beams and other similar types of beams that have relevant restraint conditions.

A.5.2 Internal support test

A.5.2.1 Test set-up

(1) The test set-up shown in figure A.7 may be used to determine the resistance of a beam that is continuous over two or more spans, to combinations of bending moment and shear force at internal supports.

NOTE: The same test set-up may be used for sleeved and overlap systems.

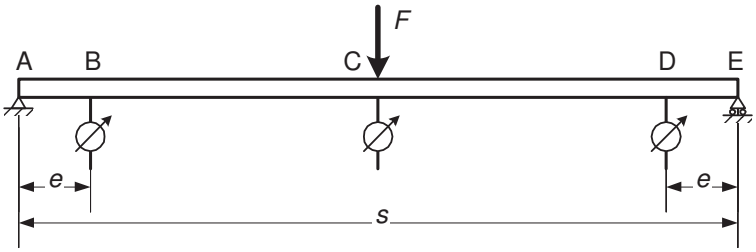

Figure A.7: Test set-up for internal support tests

(2) The supports at **A** and **E** should be hinged and roller supports respectively. At these supports, rotation about the longitudinal axis of the beam may be prevented, for example by means of cleats.

(3) The method of applying the load at **C** should correspond with the method to be used in service.

NOTE: In many cases this will mean that lateral displacement of both flanges is prevented at **C**.

(4) The displacement measurements at points **B** and **D** located at a distance e from each support, see figure A.7, should be recorded to allow these displacements to be eliminated from the results analysis

(5) The test span s should be chosen to produce combinations of bending moment and shear force that represent those expected to occur in practical application under the design load for the relevant limit state.

(6) For double span beams of span L subject to uniformly distributed loads, the test span s should normally be taken as equal to $0{,}4\,L$. However, if plastic redistribution of the support moment is expected, the test span s should be reduced to represent the appropriate ratio of support moment to shear force.

A.5.2.2 Execution of tests

(1) In addition to the general rules for testing, the following specific aspects should be taken into account.

(2) Testing should continue beyond the peak load and the recording of the deflections should be continued either until the applied load has reduced to between 10% and 15% of its peak value or until the deflection has reached a value 6 times the maximum elastic displacement.

A.5.2.3 Interpretation of test results

(1) The actual measured test results $R_{\mathrm{obs},i}$ should be adjusted as specified in A.6.2 to obtain adjusted values $R_{\mathrm{adj},i}$ related to the nominal basic yield strength f_{yb} and design thickness t of the steel, see 3.2.4.

Documento contenuto nel prodotto EUROCODICI edizione 2011. E' vietato l'uso in rete del singolo documento e la sua riproduzione. E' autorizzata la stampa per uso interno.

(2) For each value of the test span s the support reaction R should be taken as the mean of the adjusted values of the peak load F_{max} for that value of s. The corresponding value of the support moment M should then be determined from:

$$M = \frac{s\ R}{4} \qquad \text{... (A.3)}$$

Generally the influence of the dead load should be added when calculating the value of moment M following the expression (A.3).

(3) The pairs of values of M and R for each value of s should be plotted as shown in figure A.8. Pairs of values for intermediate combinations of M and R may then be determined by linear interpolation.

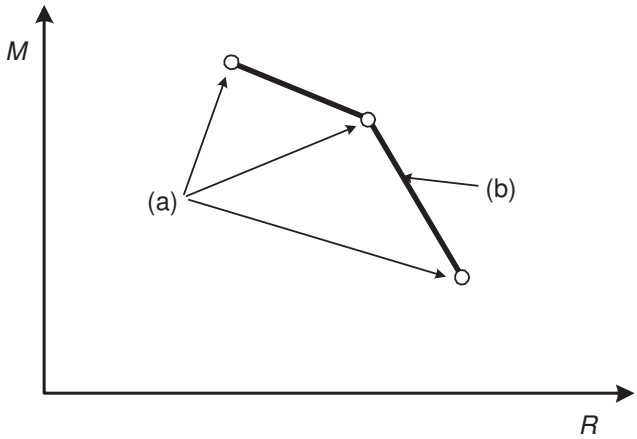

(a) test results for different test spans *s,* (b) linear interpolation

Figure A.8: Relation between support moment *M* and support reaction *R*

(4) The net deflection at the point of load application **C** in figure A.7 should be obtained from the gross measured values by deducting the mean of the corresponding deflections measured at the points **B** and **D** located at a distance e from the support points **A** and **E**, see figure A.7.

(5) For each test the applied load should be plotted against the corresponding net deflection, see figure A.9. From this plot, the rotation θ should be obtained for a range of values of the applied load using:

$$\theta = \frac{2(\delta_{pl} - \delta_e - \delta_{el})}{0{,}5\ s - e} \qquad \text{... (A.4a)}$$

$$\theta = \frac{2(\delta_{pl} - \delta_e - \delta_{lin})}{0{,}5\ s - e} \qquad \text{... (A.4b)}$$

where:

δ_{el} is the net deflection for a given load on the rising part of the curve, before F_{max};

δ_{pl} is the net deflection for the same load on the falling part of the curve, after F_{max};

δ_{lin} is the fictive net deflection for a given load, that would be obtained with a linear behaviour, see figure A.9;

δ_e is the average deflection measured at a distance e from the support, see figure A.7;

s is the test span;

e is the distance between a deflection measurement point and a support, see figure A.7.

Documento contenuto nel prodotto EUROCODICI edizione 2011. E' vietato l'uso in rete del singolo documento e la sua riproduzione. E' autorizzata la stampa per uso interno.

The expression (A.4a) is used when analyses are done based on the effective cross-section. The expression (A.4b) is used when analyses are done based on the gross cross-section.

(6) The relationship between M and θ should then be plotted for each test at a given test span s corresponding to a given value of beam span L as shown in figure A.10. The design M - θ characteristic for the moment resistance of the beam over an internal support should then be taken as equal to 0,9 times the mean value of M for all the tests corresponding to that value of the beam span L.

NOTE: Smaller value than 0,9 for reduction should be used, if the full-scale tests are used to determine effect of lateral load and buckling of free flange around the mid-support, see 10.1.3.2(4).

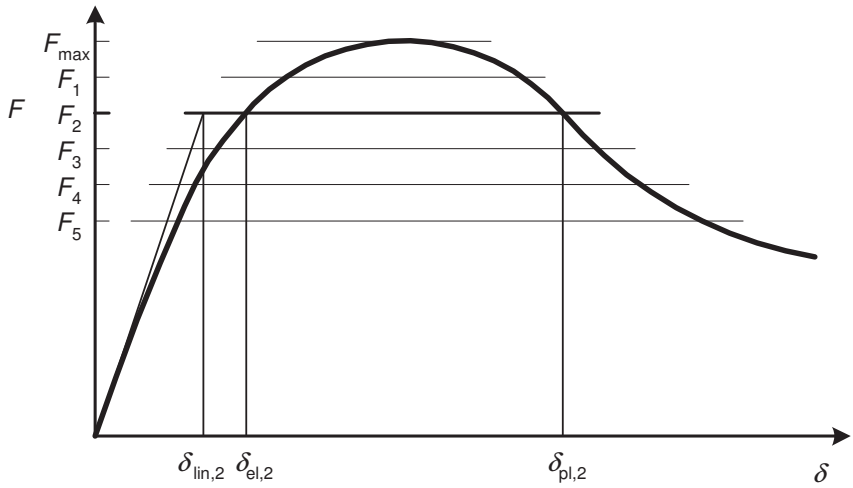

Figure A.9: Relation between load F and net deflection δ

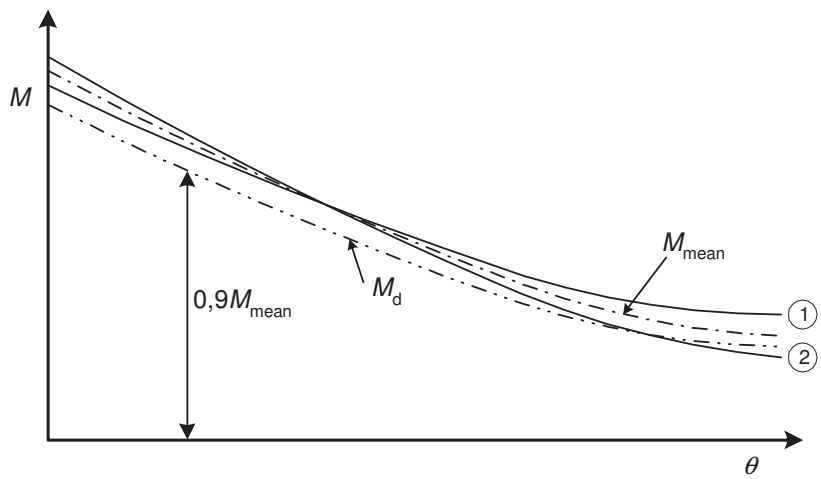

M_{mean} = mean value, M_d = design value

Figure A.10: Derivation of moment-rotation (M - θ) characteristic

A.5.3 Determination of torsional restraint

(1) The test set-up shown in figure A.11 may be used to determine the amount of torsional restraint given by adequately fastened sheeting or by another member perpendicular to the span of the beam.

Documento contenuto nel prodotto EUROCODICI edizione 2011. E' vietato l'uso in rete del singolo documento e la sua riproduzione. E' autorizzata la stampa per uso interno.

(2) This test set-up covers two different contributions to the total amount of restraint as follows:

a) The lateral stiffness K_A per unit length corresponding to the rotational stiffness of the connection between the sheeting and the beam;

b) The lateral stiffness K_B per unit length due to distortion of the cross-section of the purlin.

(3) The combined restraint per unit length may be determined from:

$$\left(1 / K_A + 1 / K_B \right) = \delta / F \qquad \text{... (A.5)}$$

where:

F is the load per unit length of the test specimen to produce a lateral deflection of $h/10$;

h is the overall depth of the specimen;

δ is the lateral displacement of the top flange in the direction of the load F.

(4) In interpreting the test results, the following parameters should be treated as variables:

- the number of fasteners per unit length of the specimen;
- the type of fasteners;
- the flexural stiffness of the beam, relative to its thickness;
- the flexural stiffness of the bottom flange of the sheeting, relative to its thickness;
- the positions of the fasteners in the flange of the sheeting;
- the distance from the fasteners to the centre of rotation of the beam;
- the overall depth of the beam;
- the possible presence of insulation between the beam and the sheeting.

Documento contenuto nel prodotto EUROCODICI edizione 2011. E' vietato l'uso in rete del singolo documento e la sua riproduzione. E' autorizzata la stampa per uso interno.

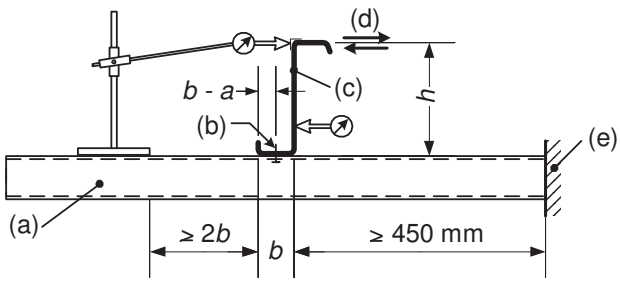

(a) sheeting, (b) fastener, (c) profile, (d) load, (e) clamped support

a) Alternative 1

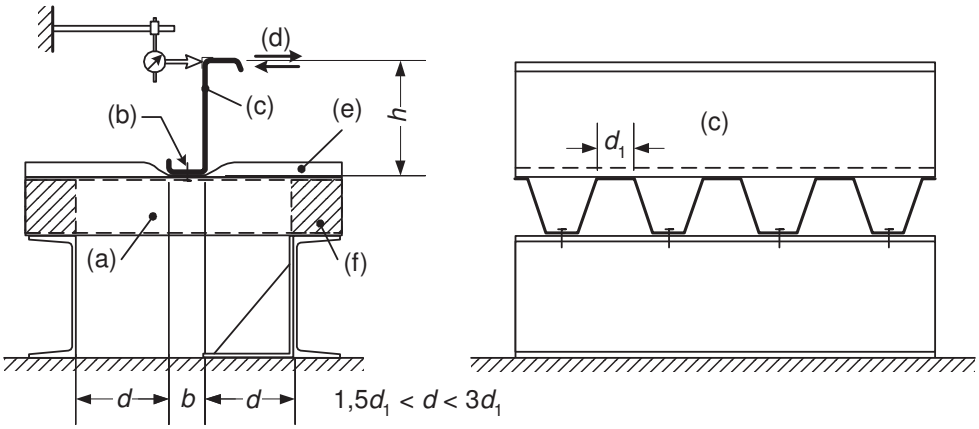

(a) sheeting, (b) fastener, (c) profile, (d) load, (e) insulation if available, (f) timber blocks

b) Alternative 2

Figure A.11: Experimental determination of spring stiffness K_A and K_B

A.6 Evaluation of test results

A.6.1 General

(1) A specimen under test should be regarded as having failed if the applied test loads reach their maximum values, or if the gross deformations exceed specified limits.

(2) The gross deformations of members should generally satisfy:

$$\delta \leq L/50 \qquad \text{... (A.6)}$$

$$\phi \leq 1/50 \qquad \text{... (A.7)}$$

where:

δ is the maximum deflection of a beam of span L;

ϕ is the sway angle of a structure.

(3) In the testing of connections, or of components in which the examination of large deformations is necessary for accurate assessment (for example, in evaluating the moment-rotation characteristics of sleeves), no limit need be placed on the gross deformation during the test.

Documento contenuto nel prodotto EUROCODICI edizione 2011. E' vietato l'uso in rete del singolo documento e la sua riproduzione. E' autorizzata la stampa per uso interno.

(4) An appropriate margin of safety should be available between a ductile failure mode and possible brittle failure modes. As brittle failure modes do not usually appear in large scale tests, additional detail tests should be carried out where necessary.

NOTE: This is often the case for connections.

A.6.2 Adjustment of test results

(1) Test results should be appropriately adjusted to allow for variations between the actual measured properties of the test specimens and their nominal values.

(2) The actual measured basic yield strength $f_{yb,obs}$ should not deviate by more than -25% from the nominal basic yield strength f_{yb} i.e. $f_{yb,obs} \geq 0{,}75\, f_{yb.}$

(3) The actual measured thickness t_{obs} should not exceed the nominal material thickness t_{nom} (see 3.2.4) by more than 12%.

(4) Adjustments should be made in respect of the actual measured values of the core material thickness $t_{obs,cor}$ and the basic yield strength $f_{yb,obs}$ for all tests, except if values measured in tests are used to calibrate a design model then provisions of (5) need not be applied.

(5) The adjusted value $R_{adj,i}$ of the test result for test i should be determined from the actual measured test result $R_{obs,i}$ using:

$$R_{adj,i} = R_{obs,i} / \mu_R \qquad \text{... (A.8)}$$

in which μ_R is the resistance adjustment coefficient given by:

$$\mu_R = \left(\frac{f_{yb,obs}}{f_{yb}} \right)^{\alpha} \left(\frac{t_{obs,cor}}{t_{cor}} \right)^{\beta} \qquad \text{... (A.9)}$$

(6) The exponent α for use in expression (A.9) should be obtained as follows:

- if $f_{yb,obs} \leq f_{yb}$: $\alpha = 0$
- if $f_{yb,obs} > f_{yb}$: $\alpha = 1$

For profiled sheets or liner trays in which compression elements have such large b_p/t ratios that local buckling is clearly the failure mode: $\alpha = 0{,}5$.

Documento contenuto nel prodotto EUROCODICI edizione 2011. E' vietato l'uso in rete del singolo documento e la sua riproduzione. E' autorizzata la stampa per uso interno.

(7) The exponent β for use in expression (A.9) should be obtained as follows:

- if $t_{obs,cor} \leq t_{cor}$: $\beta = 1$
- if $t_{obs,cor} > t_{cor}$:
  - for tests on profiled sheets or liner trays: $\beta = 2$
  - for tests on members, structures or portions of structures:
    - if $b_p/t \leq (b_p/t)_{lim}$: $\beta = 1$
    - if $b_p/t > 1{,}5(b_p/t)_{lim}$: $\beta = 2$
    - if $(b_p/t)_{lim} < b_p/t < 1{,}5(b_p/t)_{lim}$: obtain β by linear interpolation.

in which the limiting width-to thickness ratio $(b_p/t)_{lim}$ given by:

$$(b_p/t)_{lim} = 0{,}64\sqrt{\frac{E\,k_\sigma}{f_{yb}}}\cdot\sqrt{\frac{f_{yb}/\gamma_{M1}}{\sigma_{com,Ed}}} \cong 19{,}1\,\varepsilon\sqrt{k_\sigma}\cdot\sqrt{\frac{f_{yb}/\gamma_{M1}}{\sigma_{com,Ed}}} \qquad \text{... (A.10)}$$

where:

b_p is the notional flat width of a plane element;

k_σ is the relevant buckling factor from table 4.1 or 4.2 in EN 1993-1-5;

$\sigma_{com,Ed}$ is the largest calculated compressive stress in the element, at the ultimate limit state.

NOTE: In the case of available test report concerning sheet specimens with $t_{obs,cor} / t_{cor} \leq 1{,}06$ readjustment of existing value not exceeding 1,02 times the $R_{adj,i}$ value according to A.6.2 may be omitted.

A.6.3 Characteristic values

A.6.3.1 General

(1) Characteristic values may be determined statistically, provided that there are at least 4 test results.

NOTE: A larger number is generally preferable, particularly if the scatter is relatively wide.

(2) If the number of test results available is 3 or less, the method given in A.6.3.3 may be used.

(3) The characteristic minimum value should be determined using the following provisions. If the characteristic maximum value or the characteristic mean value is required, it should be determined by using appropriate adaptations of the provisions given for the characteristic minimum value.

(4) The characteristic value R_k determined on the basis of at least 4 tests may be obtained from:

$$R_k = R_m +/- \; k\,s \qquad \text{... (A.11)}$$

where:

s is the standard deviation;

k is the appropriate coefficient from table A.2;

R_m is the mean value of the adjusted test results R_{adj};

The unfavourable sign "+" or "-" should be adopted for given considered value.

NOTE: As general rule, for resistance characteristic value, the sign "-" should be taken and e.g. for rotation characteristic value, both are to be considered.

Documento contenuto nel prodotto EUROCODICI edizione 2011. E' vietato l'uso in rete del singolo documento e la sua riproduzione. E' autorizzata la stampa per uso interno.

(5) The standard deviation s may be determined using:

$$s = \left[\sum_{i=1}^{n} \left(R_{\text{adj.i}} - R_{\text{m}} \right)^2 \Big/ (n-1) \right]^{0,5} \equiv \left[\left[\sum_{i=1}^{n} \left(R_{\text{adj.i}} \right)^2 - (1/n) \left(\sum_{i=1}^{n} R_{\text{adj.i}} \right)^2 \right] \Big/ (n-1) \right]^{0,5} \qquad \text{... (A.12)}$$

where:

$R_{\text{adj,i}}$ is the adjusted test result for test i;

n is the number of tests.

Table A.2: Values of the coefficient k

N	4	5	6	8	10	20	30	∞
k	2,63	2,33	2,18	2,00	1,92	1,76	1,73	1,64

A.6.3.2 Characteristic values for families of tests

(1) A series of tests carried out on a number of otherwise similar structures, portions of structures, members, sheets or other structural components, in which one or more parameters is varied, may be treated as a single family of tests, provided that they all have the same failure mode. The parameters that are varied may include cross-sectional dimensions, spans, thicknesses and material strengths.

(2) The characteristic resistances of the members of a family may be determined on the basis of a suitable design expression that relates the test results to all the relevant parameters. This design expression may either be based on the appropriate equations of structural mechanics, or determined on an empirical basis.

(3) The design expression should be modified to predict the mean measured resistance as accurately as practicable, by adjusting the coefficients to optimize the correlation.

NOTE: Information on this process is given Annex D of EN 1990.

(4) In order to calculate the standard deviation s each test result should first be normalized by dividing it by the corresponding value predicted by the design expression. If the design expression has been modified as specified in (3), the mean value of the normalized test results will be unity. The number of tests n should be taken as equal to the total number of tests in the family.

(5) For a family of at least four tests, the characteristic resistance R_{k} should then be obtained from expression (A.11) by taking R_{m} as equal to the value predicted by the design expression, and using the value of k from table A.2 corresponding to a value of n equal to the total number of tests in the family.

A.6.3.3 Characteristic values based on a small number of tests

(1) If only one test is carried out, then the characteristic resistance R_{k} corresponding to this test should be obtained from the adjusted test result R_{adj} using:

$$R_{\text{k}} = 0,9\, \eta_{\text{k}} R_{\text{adj}} \qquad \text{... (A.13)}$$

in which η_{k} should be taken as follows, depending on the failure mode:

- yielding failure: $\eta_{\text{k}} = 0,9$;
- gross deformation: $\eta_{\text{k}} = 0,9$;
- local buckling: $\eta_{\text{k}} = 0,8 \ldots 0,9$ depending on effects on global behaviour in tests ;
- overall instability: $\eta_{\text{k}} = 0,7$.

Documento contenuto nel prodotto EUROCODICI edizione 2011. E' vietato l'uso in rete del singolo documento e la sua riproduzione. E' autorizzata la stampa per uso interno.

(2) For a family of two or three tests, provided that each adjusted test result $R_{adj,i}$ is within $\pm 10\%$ of the mean value R_m of the adjusted test results, the characteristic resistance R_k should be obtained using:

$$R_k = \eta_k R_m \qquad \text{... (A.14)}$$

(3) The characteristic values of stiffness properties (such as flexural or rotational stiffness) may be taken as the mean value of at least two tests, provided that each test result is within $\pm 10\%$ of the mean value.

(4) In the case of one single test the characteristic value of the stiffness is reduced by 0,95 for favourable value and increased by 1,05 for non-favourable value.

A.6.4 Design values

(1) The design value of a resistance R_d should be derived from the corresponding characteristic value R_k determined by testing, using:

$$R_d = \eta_{sys} \frac{R_k}{\gamma_M} \qquad \text{... (A.15)}$$

where:

γ_M is the partial factor for resistance;

η_{sys} is a conversion factor for differences in behaviour under test conditions and service conditions.

(2) The appropriate value for η_{sys} should be determined in dependance of the modelling for testing.

(3) For sheeting and for other well defined standard testing procedures (including A.3.2.1 stub column tests, A.3.3 tension tests and A.3.4 bending tests) η_{sys} may be taken as equal to 1,0. For tests on torsionally restrained beams conformed to the section A.5, $\eta_{sys} = 1{,}0$ may also be taken.

(4) For other types of tests in which possible instability phenomena, or modes of behaviour, of structures or structural components might not be covered sufficiently by the tests, the value of η_{sys} should be assessed taking into account the actual testing conditions, in order to achieve the necessary reliability.

NOTE: The partial factor γ_M may be given in the National Annex. It is recommended to use the γ_M-values as chosen in the design by calculation given in section 2 or section 8 of this part unless other values result from the use of Annex D of EN 1990.

A.6.5 Serviceability

(1) The provisions given in Section 7 should be satisfied.

Documento contenuto nel prodotto EUROCODICI edizione 2011. E' vietato l'uso in rete del singolo documento e la sua riproduzione. E' autorizzata la stampa per uso interno.

Annex B [informative] – Durability of fasteners

(1) In Construction Classes I, II and III table B.1 may be applied.

Table B.1: Fastener material with regard to corrosion environment (and sheeting material only for information). Only the risk of corrosion is considered. Classification of environment according to EN ISO 12944-2.

Classification of environment	**Sheet material**	**Material of fastener**					
		Aluminium	Electro galvanized steel. Coat thickness > 7µm	Hot-dip zinc coated steel[b]. Coat thickness >45µm	Stainless steel, case hardened. 1.4006 [d]	Stainless steel, 1.4301 [d] 1.4436 [d]	Monel[a]
C1	A, B, C	X	X	X	X	X	X
	D, E, S	X	X	X	X	X	X
C2	A	X	-	X	X	X	X
	C, D, E	X	-	X	X	X	X
	S	X	-	X	X	X	X
C3	A	X	-	X	-	X	X
	C, E	X	-	X	(X)[C]	(X)[C]	-
	D	X	-	X	-	(X)[C]	X
	S	-	-	X	X	X	X
C4	A	X	-	(X)[C]	-	(X)[C]	-
	D	-	-	X	-	(X)[C]	-
	E	X	-	X	-	(X)[C]	-
	S	-	-	X	-	X	X
C5-I	A	X	-	-	-	(X)[C]	-
	D[f]	-	-	X	-	(X)[C]	-
	S	-	-	-	-	X	-
C5-M	A	X	-	-	-	(X)[C]	-
	D[f]	-	-	X	-	(X)[C]	-
	S	-	-	-	-	X	-

NOTE: Fastener of steel without coating may be used in corrosion classification class C1.

A = Aluminium irrespective of surface finish

B = Un-coated steel sheet

C = Hot-dip zinc coated (Z275) or aluzink coated (AZ150) steel sheet

D = Hot-dip zinc coated steel sheet + coating of paint or plastics

E = Aluzink coated (AZ185) steel sheet

S = Stainless steel

X = Type of material recommended from the corrosion standpoint

(X) = Type of material recommended from the corrosion standpoint under the specified condition only

- = Type of material not recommended from the corrosion standpoint

a Refers to rivets only

b Refers to screws and nuts only

c Insulating washer, of material resistant to ageing, between sheeting and fastener

d Stainless steel EN 10 088

e Risk of discoloration.

f Always check with sheet supplier

(2) The environmental classification following EN-ISO 12944-2 is presented in table B.2.

Documento contenuto nel prodotto EUROCODICI edizione 2011. E' vietato l'uso in rete del singolo documento e la sua riproduzione. E' autorizzata la stampa per uso interno.

Table B.2: Atmospheric-corrosivity categories according to EN ISO 12944-2 and examples of typical environments

Corro-sivity category	Corro-sivity level	Examples of typical environments in a temperate climate (informative))	
		Exterior	Interior
C1	Very low	-	Heated buildings with clean atmospheres, e. g. offices, shops, schools and hotels.
C2	Low	Atmospheres with low level of pollution. Mostly rural areas	Unheated buildings where condensation may occur, e. g. depots, sport halls.
C3	Medium	Urban and industrial atmospheres, moderate sulphur dioxide pollution. Coastal areas with low salinity.	Production rooms with high humidity and some air pollution, e. g. food-processing plants, laundries, breweries and dairies.
C4	High	Industrial areas and coastal areas with moderate salinity.	Chemical plants, swimming pools, coastal ship- and boatyards.
C5-I	Very high (in-dustrial)	Industrial areas with high humidity and aggressive atmosphere.	Building or areas with almost permanent condensation and with high pollution.
C5-M	Very high (marine)	Coastal and offshore areas with high salinity.	Building or areas with almost permanent condensation and with high pollution.

Documento contenuto nel prodotto EUROCODICI edizione 2011. E' vietato l'uso in rete del singolo documento e la sua riproduzione. E' autorizzata la stampa per uso interno.

Annex C [informative] – Cross section constants for thin-walled cross sections

C.1 Open cross sections

(1) Divide the cross section into n parts. Number the parts 1 to n.

Insert nodes between the parts. Number the nodes 0 to n.

Part i is then defined by nodes i - 1 and i.

Give nodes, co-ordinates and (effective) thickness.

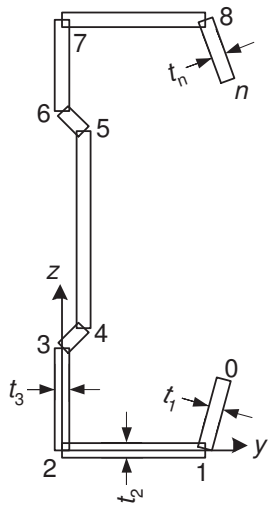

Figure C.1 Cross section nodes

Nodes and parts $\quad j = 0..n \;\; i = 1..n$

Area of cross section parts

$$dA_i = \overrightarrow{\left[t_i \cdot \sqrt{\left(y_i - y_{i-1}\right)^2 + \left(z_i - z_{i-1}\right)^2}\right]}$$

Cross section area

$$A = \sum_{i=1}^{n} dA_i$$

First moment of area with respect to y-axis and coordinate for gravity centre

$$S_{y0} = \sum_{i=1}^{n} \left(z_i + z_{i-1}\right) \cdot \frac{dA_i}{2} \qquad z_{gc} = \frac{S_{y0}}{A}$$

Second moment of area with respect to original y-axis and new y-axis through gravity centre

$$I_{y0} = \sum_{i=1}^{n} \left[\left(z_i\right)^2 + \left(z_{i-1}\right)^2 + z_i \cdot z_{i-1}\right] \cdot \frac{dA_i}{3} \qquad I_y = I_{y0} - A \cdot z_{gc}{}^2$$

First moment of area with respect to z-axis and gravity centre

$$S_{z0} = \sum_{i=1}^{n} \left(y_i + y_{i-1}\right) \cdot \frac{dA_i}{2} \qquad y_{gc} = \frac{S_{z0}}{A}$$

Second moment of area with respect to original z-axis and new z-axis through gravity centre

$$I_{z0} = \sum_{i=1}^{n} \left[\left(z_i\right)^2 + \left(z_{i-1}\right)^2 + z_i \cdot z_{i-1}\right] \cdot \frac{dA_i}{3} \qquad I_z = I_{z0} - A \cdot y_{gc}{}^2$$

Documento contenuto nel prodotto EUROCODICI edizione 2011. E' vietato l'uso in rete del singolo documento e la sua riproduzione. E' autorizzata la stampa per uso interno.

Product moment of area with respect of original y- and z-axis and new axes through gravity centre

$$I_{yz0} = \sum_{i=1}^{n} \left(2 \cdot y_{i-1} \cdot z_{i-1} + 2 \cdot y_i \cdot z_i + y_{i-1} \cdot z_i + y_i \cdot z_{i-1}\right) \cdot \frac{dA_i}{6} \quad I_{yz} = I_{yz0} - \frac{S_{y0} \cdot S_{z0}}{A}$$

Principal axis

$$\alpha = \frac{1}{2} \arctan\left(\frac{2 I_{yz}}{I_z - I_y}\right) \text{ if } (I_z - I_y) \neq 0 \text{ otherwise } \alpha = 0$$

$$I_\xi = \frac{1}{2} \cdot \left[I_y + I_z + \sqrt{(I_z - I_y)^2 + 4 \cdot I_{yz}^{\,2}}\right]$$

$$I_\eta = \frac{1}{2} \cdot \left[I_y + I_z - \sqrt{(I_z - I_y)^2 + 4 \cdot I_{yz}^{\,2}}\right]$$

Sectorial co-ordinates

$$\omega_0 = 0 \qquad \omega_{0_i} = y_{i-1} \cdot z_i - y_i \cdot z_{i-1} \qquad \omega_i = \omega_{i-1} + \omega_{0_i}$$

Mean of sectorial coordinate

$$I_\omega = \sum_{i=1}^{n} \left(\omega_{i-1} + \omega_i\right) \cdot \frac{dA_i}{2} \qquad \omega_{mean} = \frac{I_\omega}{A}$$

Sectorial constants

$$I_{y\omega 0} = \sum_{i=1}^{n} \left(2 \cdot y_{i-1} \cdot \omega_{i-1} + 2 \cdot y_i \cdot \omega_i + y_{i-1} \cdot \omega_i + y_i \cdot \omega_{i-1}\right) \cdot \frac{dA_i}{6} \qquad I_{y\omega} = I_{y\omega 0} - \frac{S_{z0} \cdot I_\omega}{A}$$

$$I_{z\omega 0} = \sum_{i=1}^{n} \left(2 \cdot \omega_{i-1} \cdot z_{i-1} + 2 \cdot \omega_i \cdot z_i + \omega_{i-1} \cdot z_i + \omega_i \cdot z_{i-1}\right) \cdot \frac{dA_i}{6} \qquad I_{z\omega} = I_{z\omega 0} - \frac{S_{y0} \cdot I_\omega}{A}$$

$$I_{\omega\omega 0} = \sum_{i=1}^{n} \left[(\omega_i)^2 + (\omega_{i-1})^2 + \omega_i \cdot \omega_{i-1}\right] \cdot \frac{dA_i}{3} \qquad I_{\omega\omega} = I_{\omega\omega 0} - \frac{I_\omega^{\,2}}{A}$$

Shear centre

$$y_{sc} = \frac{I_{z\omega} I_z - I_{y\omega} I_{yz}}{I_y \cdot I_z - I_{yz}^{\,2}} \qquad z_{sc} = \frac{-I_{y\omega} I_y + I_{z\omega} I_{yz}}{I_y \cdot I_z - I_{yz}^{\,2}} \qquad (I_y I_z - I_{yz}^2 \neq 0)$$

Warping constant

$$I_w = I_{\omega\omega} + z_{sc} \cdot I_{y\omega} - y_{sc} \cdot I_{z\omega}$$

Torsion constants

$$I_t = \sum_{i=1}^{n} dA_i \cdot \frac{(t_i)^2}{3} \qquad W_t = \frac{I_t}{min(t)}$$

Documento contenuto nel prodotto EUROCODICI edizione 2011. E' vietato l'uso in rete del singolo documento e la sua riproduzione. E' autorizzata la stampa per uso interno.

Sectorial co-ordinate with respect to shear centre

$$\omega_{s_j} = \omega_j - \omega_{mean} + z_{sc}\cdot(y_j - y_{gc}) - y_{sc}\cdot(z_j - z_{gc})$$

Maximum sectorial co-ordinate and warping modulus

$$\omega_{max} = max(|\omega_s|) \qquad W_w = \frac{I_w}{\omega_{max}}$$

Distance between shear centre and gravity centre

$$y_s = y_{sc} - y_{gc} \qquad z_s = z_{sc} - z_{gc}$$

Polar moment of area with respect to shear centre

$$I_p = I_y + I_z + A(y_s^2 + z_s^2)$$

Non-symmetry factors z_j and y_j

$$z_j = z_s - \frac{0.5}{I_y}\cdot\sum_{i=1}^{n}\left[(z_{c_i})^3 + z_{c_i}\cdot\left[\frac{(z_i - z_{i-1})^2}{4} + (y_{c_i})^2 + \frac{(y_i - y_{i-1})^2}{12}\right] + y_{c_i}\cdot\frac{(y_i - y_{i-1})\cdot(z_i - z_{i-1})}{6}\right]\cdot dA_i$$

$$y_j = y_s - \frac{0.5}{I_z}\cdot\sum_{i=1}^{n}\left[(y_{c_i})^3 + y_{c_i}\cdot\left[\frac{(y_i - y_{i-1})^2}{4} + (z_{c_i})^2 + \frac{(z_i - z_{i-1})^2}{12}\right] + z_{c_i}\cdot\frac{(z_i - z_{i-1})\cdot(y_i - y_{i-1})}{6}\right]\cdot dA_i$$

where the coordinates for the centre of the cross section parts with respect to shear center are

$$y_{c_i} = \frac{y_i + y_{i-1}}{2} - y_{gc} \qquad z_{c_i} = \frac{z_i + z_{i-1}}{2} - z_{gc}$$

NOTE: $z_j = 0$ ($y_j = 0$) for cross sections with *y*-axis (*z*-axis) being axis of symmetry, see Figure C.1.

C.2 Cross section constants for open cross section with branches

(1) In cross sections with branches, formulae in C.1 can be used. However, follow the branching back (with thickness $t = 0$) to the next part with thickness $t \neq 0$, see branch 3 - 4 - 5 and 6 - 7 in Figure C.2. A section with branches is a section with points where more than two parts are joined together.

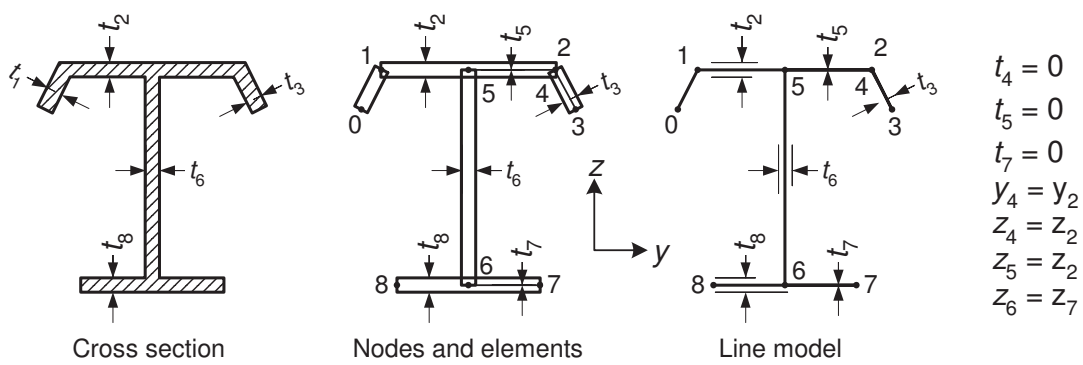

Figure C.2 Nodes and parts in a cross section with branches

Documento contenuto nel prodotto EUROCODICI edizione 2011. E' vietato l'uso in rete del singolo documento e la sua riproduzione. E' autorizzata la stampa per uso interno.

C.3 Torsion constant and shear centre of cross section with closed part

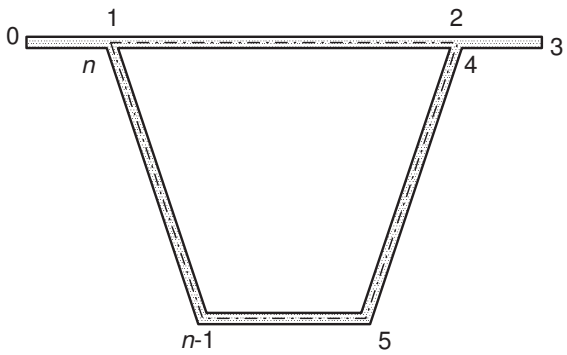

Figure C.3 Cross section with closed part

(1) For a symmetric or non-symmetric cross section with a closed part, Figure C.3, the torsion constant is given by

$$I_t = \frac{4A_t^2}{S_t} \text{ and } W_t = 2\,A_t \min(t_i)$$

where

$$A_t = 0{,}5 \sum_{i=2}^{n} (y_i - y_{i-1})(z_i + z_{i-1})$$

$$S_t = \sum_{i=2}^{n} \frac{\sqrt{(y_i - y_{i-1})^2 + (z_i - z_{i-1})^2}}{t_i} \qquad (t_i \neq 0)$$

Documento contenuto nel prodotto EUROCODICI edizione 2011. E' vietato l'uso in rete del singolo documento e la sua riproduzione. E' autorizzata la stampa per uso interno.

Annex D [informative] – Mixed effective width/effective thickness method for outstand elements

(1) This annex gives an alternative to the effective width method in 5.5.2 for outstand elements in compression. The effective area of the element is composed of the element thickness times an effective width b_{e0} and an effective thickness t_{eff} times the rest of the element width b_p. See Table D.1.

The slenderness parameter $\bar{\lambda}_p$ and reduction factor ρ is found in 5.5.2 for the buckling factor k_σ in Table D.1.

The stress relation factor ψ in the buckling factor k_σ may be based on the stress distribution for the gross cross section.

(2) The resistance of the section should be based on elastic stress distribution over the section.

Documento contenuto nel prodotto EUROCODICI edizione 2011. E' vietato l'uso in rete del singolo documento e la sua riproduzione. E' autorizzata la stampa per uso interno.

Table D.1: Outstand compression elements

Maximum compression at free longitudinal edge		
Stress distribution	Effective width and thickness	Buckling factor
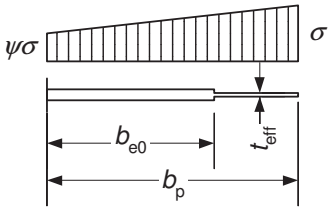	$1 \geq \psi \geq 0$ $b_{e0} = 0{,}42 b_p$ $t_{eff} = (1{,}75\rho - 0{,}75)t$	$1 \geq \psi \geq -2$ $k_\sigma = \dfrac{1{,}7}{3+\psi}$
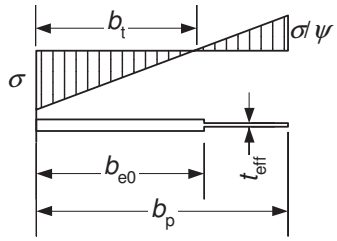	$\psi < 0$ $b_{e0} = \dfrac{0{,}42 b_p}{(1-\psi)} + b_t < b_p$ $b_t = \dfrac{\psi b_p}{(\psi - 1)}$ $t_{eff} = (1{,}75\rho - 0{,}75 - 0{,}15\psi)t$	$-2 > \psi \geq -3$ $k_\sigma = 3{,}3(1+\psi) + 1{,}25\psi^2$ $\psi < -3$ $k_\sigma = 0{,}29(1-\psi)^2$
Maximum compression at supported longitudinal edge		
Stress distribution	Effective width and thickness	Buckling factor
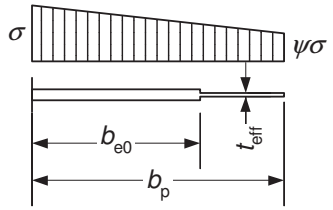	$1 \geq \psi \geq 0$ $b_{e0} = 0{,}42 b_p$ $t_{eff} = (1{,}75\rho - 0{,}75)t$	$1 \geq \psi \geq 0$ $k_\sigma = \dfrac{1{,}7}{1+3\psi}$
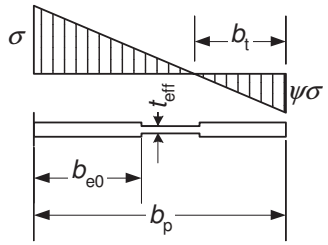	$\psi < 0$ $b_{e0} = \dfrac{0{,}42 b_p}{(1-\psi)}$ $b_t = \dfrac{\psi b_p}{(\psi - 1)}$ $t_{eff} = (1{,}75\rho - 0{,}75)t$	$0 \geq \psi \geq -1$ $k_\sigma = 1{,}7 - 5\psi + 17{,}1\psi^2$ $\psi < -1$ $k_\sigma = 5{,}98(1-\psi)^2$

Documento contenuto nel prodotto EUROCODICI edizione 2011. E' vietato l'uso in rete del singolo documento e la sua riproduzione. E' autorizzata la stampa per uso interno.

Annex E [Informative] – Simplified design for purlins

(1) Purlins with C-, Z- and Σ-cross-sections with or without additional stiffeners in web or flange may be designed due to (2) to (4) if the following conditions are fulfilled :

- the cross-section dimension are within the range of table E.1;
- the purlins are horizontally restraint by trapezoidal sheeting where the horizontal restraint fulfill the conditions of the equation (10.1a);
- the purlins are restraint rotationally by trapezoidal sheeting and the conditions of table E.1 are met.
- the purlins have equal spans and uniform loading

This method should not be used:

- for systems using anti-sag bars;
- for sleeve or overlapping systems;
- for application of axial forces N_{Ed}.

NOTE: The limitation and validity of this method may be given in the National Annex.

Table E.1: Limitations to be fulfilled if the simplified design method is used and other limits as in Table 5.1 and section 5.2

(the axis y and z are parallel respect rectangular to the top flange)

purlins	*t* [mm]	*b*/*t*	*h*/*t*	*h*/*b*	*c*/*t*	*b*/*c*	*L*/*h*
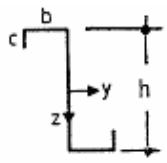	≥ 1,25	≤ 55	≤ 160	≤ 3,43	≤ 20	≤ 4,0	≥ 15
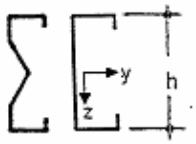	≥ 1,25	≤ 55	≤ 160	≤ 3,43	≤ 20	≤ 4,0	≥ 15

Documento contenuto nel prodotto EUROCODICI edizione 2011. E' vietato l'uso in rete del singolo documento e la sua riproduzione. E' autorizzata la stampa per uso interno.

(2) The design value of the bending moment M_{Ed} should satisfy

$$\frac{M_{Ed}}{M_{LT,Rd}} \leq 1 \qquad \text{...(E.1)}$$

where

$$M_{LT,Rd} = \left(\frac{f_y}{\gamma_{M1}}\right) W_{eff,y} \frac{\chi_{LT}}{k_d} \qquad \text{...(E.2)}$$

and

$W_{eff,y}$ is section modulus of the effective cross-section with regard to the y-y axis;

χ_{LT} is reduction factor for lateral torsional buckling in dependency of $\bar{\lambda}_{LT}$ due to 6.2.3, where α_{LT} is substituted by $\alpha_{LT,eff}$;

and

$$\bar{\lambda}_{LT} = \sqrt{\frac{W_{eff,y}\, f_y}{M_{cr}}} \qquad \text{...(E.3)}$$

$$\alpha_{LT,eff} = \alpha_{LT} \sqrt{\frac{W_{el,y}}{W_{eff,y}}} \qquad \text{...(E.4)}$$

and

α_{LT} is imperfection factor due to 6.2.3;

$W_{el,y}$ is section modulus of the gross cross-section with regard to the y-y axis;

k_d is coefficient for consideration of the non restraint part of the purlin according to equation (E.5) and table E.2;

$$k_d = \left(a_1 - a_2 \frac{L}{h}\right), \text{ but } \geq 1.0 \qquad \text{...(E.5)}$$

a_1, a_2 coefficients from table E.2;

L span of the purlin;

h overall depth of the purlin.

Documento contenuto nel prodotto EUROCODICI edizione 2011. E' vietato l'uso in rete del singolo documento e la sua riproduzione. E' autorizzata la stampa per uso interno.

Table E.2: Coefficients a_1, a_2 for equation (E.5)

System	Z-purlins		C-purlins		Σ-purlins	
	a_1	a_2	a_1	a_2	a_1	a_2
single span beam gravity load	1.0	0	1.1	0.002	1.1	0.002
single span beam uplift load	1.3	0	3.5	0.050	1.9	0.020
continuous beam gravity load	1.0	0	1.6	0.020	1.6	0.020
continuous beam uplift load	1.4	0.010	2.7	0.040	1.0	0

(3) The reduction factor χ_{LT} may be chosen by equation (E.6), if a single span beam under gravity load is present or if equation (E.7) is met

$$\chi_{LT} = 1{,}0 \qquad \ldots(E.6)$$

$$C_D \geq \frac{M_{el,u}^2}{E\,I_v}\,k_\vartheta \qquad \ldots(E.7)$$

where

$M_{el,u} = W_{el,u}\,f_y$ elastic moment of the gross cross-section with regard to the major u-u axis; …(E.8)

I_v moment of inertia of the gross cross-section with regard to the minor v-v axis:

k_ϑ factor for considering the static system of the purlin due to table E.3.

NOTE: For equal flanged C-purlins and Σ-purlins $I_v = I_z$, $W_u = W_y$, and $M_{el,u} = M_{el,y}$. Conventions used for cross section axes are shown in Figure 1.7 and section 1.6.4.

Table E.3: Factors k_ϑ

Statical system	Gravity load	Uplift load
	-	0.210
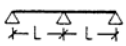	0.07	0.029
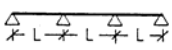	0.15	0.066
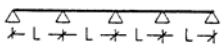	0.10	0.053

Documento contenuto nel prodotto EUROCODICI edizione 2011. E' vietato l'uso in rete del singolo documento e la sua riproduzione. E' autorizzata la stampa per uso interno.

(4) The reduction factor χ_{LT} should be calculated according to 6.2.4 using $\bar{\lambda}_{LT}$ and $\alpha_{LT,eff}$ in cases which are not met by (3). The elastic critical moment for lateral-torsional buckling M_{cr} may be calculated by the equation (E.9):

$$M_{cr} = \frac{k}{L}\sqrt{G\,I_t^*\,E\,I_v} \qquad \text{...(E.9)}$$

where

I_t^* is the fictitious St. Venant torsion constant considering the effective rotational restraint by equation (E.10) and (E.11):

$$I_t^* = I_t + C_D\,\frac{L^2}{\pi^2\,G} \qquad \text{...(E.10)}$$

I_t is St. Venant torsion constant of the purlin;

$$1/C_D = \frac{1}{C_{D,A}} + \frac{1}{C_{D,B}} + \frac{1}{C_{D,C}} \qquad \text{...(E.11)}$$

$C_{D,A}$, $C_{D,C}$ rotational stiffnesses due to 10.1.5.2;

$C_{D,B}$ rotational stiffnesses due to distorsion of the cross-section of the purlin due to 10.1.5.1, $C_{D,B} = K_B\,h^2$, where h = depth of the purlin and K_B according to 10.1.5.1;

k lateral torsional buckling coefficient due to table E.4.

Table E.4: Lateral torsional buckling coefficients *k* for purlins restrained horizontally at the upper flange

Statical system	Gravity load	Uplift load
	∞	10.3
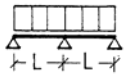	17.7	27.7
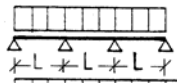	12.2	18.3
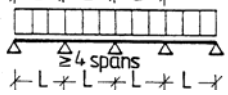	14.6	20.5

Documento contenuto nel prodotto EUROCODICI edizione 2011. E' vietato l'uso in rete del singolo documento e la sua riproduzione. E' autorizzata la stampa per uso interno.

Documento contenuto nel prodotto EUROCODICI edizione 2011. E' vietato l'uso in rete del singolo documento e la sua riproduzione. E' autorizzata la stampa per uso interno.

UNI
Ente Nazionale Italiano di Unificazione
Via Sannio, 2
20137 Milano, Italia

Riproduzione vietata - Legge 22 aprile 1941 Nº 633 e successivi aggiornamenti.