Documento contenuto nel prodotto EUROCODICI edizione 2011. E' vietato l'uso in rete del singolo documento e la sua riproduzione. E' autorizzata la stampa per uso interno.

NORMA EUROPEA

Eurocodice 3

# Progettazione delle strutture di acciaio

## Parte 1-5: Elementi strutturali a lastra

UNI EN 1993-1-5

GENNAIO 2007

Corretta il 28 ottobre 2009

Eurocode 3

Design of steel structures

Part 1-5: Plated structural elements

La norma fornisce i requisiti per la progettazione di lastre di acciaio con o senza irrigidimenti. I metodi forniti possono essere applicati anche a parti piane di serbatoi o silos con riferimento ai soli effetti nel piano.

TESTO INGLESE

La presente norma è la versione ufficiale in lingua inglese della norma europea EN 1993-1-5 (edizione ottobre 2006) e tiene conto dell'errata corrige di aprile 2009 (AC:2009).

La presente norma è la revisione della UNI ENV 1993-1-5:2001.

ICS 91.010.30; 91.080.10

**UNI**
**Ente Nazionale Italiano di Unificazione**
Via Sannio, 2
20137 Milano, Italia

© UNI
Riproduzione vietata. Tutti i diritti sono riservati. Nessuna parte del presente documento può essere riprodotta o diffusa con un mezzo qualsiasi, fotocopie, microfilm o altro, senza il consenso scritto dell'UNI.
www.uni.com

Documento contenuto nel prodotto EUROCODICI edizione 2011. E' vietato l'uso in rete del singolo documento e la sua riproduzione. E' autorizzata la stampa per uso interno.

## PREMESSA NAZIONALE

La presente norma costituisce il recepimento, in lingua inglese, della norma europea EN 1993-1-5 (edizione ottobre 2006 + errata corrige AC:2009), che assume così lo status di norma nazionale italiana.

La presente norma è stata elaborata sotto la competenza della Commissione Tecnica UNI

**Ingegneria strutturale**

La presente norma è stata ratificata dal Presidente dell'UNI ed è entrata a far parte del corpo normativo nazionale il 18 gennaio 2007.

Le norme UNI sono elaborate cercando di tenere conto dei punti di vista di tutte le parti interessate e di conciliare ogni aspetto conflittuale, per rappresentare il reale stato dell'arte della materia ed il necessario grado di consenso.
Chiunque ritenesse, a seguito dell'applicazione di questa norma, di poter fornire suggerimenti per un suo miglioramento o per un suo adeguamento ad uno stato dell'arte in evoluzione è pregato di inviare i propri contributi all'UNI, Ente Nazionale Italiano di Unificazione, che li terrà in considerazione per l'eventuale revisione della norma stessa.

Le norme UNI sono revisionate, quando necessario, con la pubblicazione di nuove edizioni o di aggiornamenti.
È importante pertanto che gli utilizzatori delle stesse si accertino di essere in possesso dell'ultima edizione e degli eventuali aggiornamenti.
Si invitano inoltre gli utilizzatori a verificare l'esistenza di norme UNI corrispondenti alle norme EN o ISO ove citate nei riferimenti normativi.

Documento contenuto nel prodotto EUROCODICI edizione 2011. E' vietato l'uso in rete del singolo documento e la sua riproduzione. E' autorizzata la stampa per uso interno.

EUROPEAN STANDARD

NORME EUROPÉENNE

EUROPÄISCHE NORM

# EN 1993-1-5:2006/AC

April 2009
Avril 2009
April 2009

**ICS** 91.010.30; 91.080.10

English version
Version Française
Deutsche Fassung

## Eurocode 3 - Design of steel structures - Part 1-5: Plated structural elements

## Eurocode 3 - Calcul des structures en acier - Partie 1-5: Plaques planes

## Eurocode 3 - Bemessung und Konstruktion von Stahlbauten - Teil 1-5: Plattenförmige Bauteile

This corrigendum becomes effective on 1 April 2009 for incorporation in the three official language versions of the EN.

Ce corrigendum prendra effet le 1 avril 2009 pour incorporation dans les trois versions linguistiques officielles de la EN.

Die Berichtigung tritt am 1.April 2009 zur Einarbeitung in die drei offiziellen Sprachfassungen der EN in Kraft.

EUROPEAN COMMITTEE FOR STANDARDIZATION
COMITÉ EUROPÉEN DE NORMALISATION
EUROPÄISCHES KOMITEE FÜR NORMUNG

**Management Centre: Avenue Marnix 17, B-1000 Brussels**

© 2009 CEN All rights of exploitation in any form and by any means reserved worldwide for CEN national Members.
Tous droits d'exploitation sous quelque forme et de quelque manière que ce soit réservés dans le monde entier aux membres nationaux du CEN.
Alle Rechte der Verwertung, gleich in welcher Form und in welchem Verfahren, sind weltweit den nationalen Mitgliedern von CEN vorbehalten.

Ref. No.:EN 1993-1-5:2006/AC:2009 D/E/F

Documento contenuto nel prodotto EUROCODICI edizione 2011. E' vietato l'uso in rete del singolo documento e la sua riproduzione. E' autorizzata la stampa per uso interno.


## 1) Modification to Subclause 1.4

*Change the definition for* "$b_w$" *into:* "clear width between welds for welded sections or between ends of radii for rolled sections".

## 2) Modification to Subclause 2.3

*Paragraph* '(2)', *change* "if the condition in 3.1 is fulfilled" *into:* "if the condition in 2.2(5) is fulfilled".

## 3) Modification to Subclause 2.6

*Paragraph* '(1)', 'NOTE', *delete:* "plate".

## 4) Modifications to Subclause 3.2.1

*Title of the subclause, change* "Effective width" *into:* "Effective$^s$ width".

*Paragraph* '(1)', *change in the last sentence* "This effective width may" *into:* "This effective$^s$ width may".

## 5) Modification to Subclause 3.2.2

*Paragraph* '(1)', 'Figure 3.3', *change* "with the effective width" *into:* "with the effective$^s$ width".

## 6) Modifications to Subclause 3.2.3

*Paragraph* '(1)', *Equation* '(3.2)', *change* "$a_{st,l}$" *into:* "$a_{st,1}$".

*Paragraph* '(1)', *Equation* '(3.2)', *first line of the paragraph beginning with* 'where:', *change* "area of the stiffeners smeared" *into:* "area of the directly loaded stiffeners divided".

*Paragraph* '(1)', *Equation* '(3.2)', *2nd sentence under* 'where:', *change* "This may be taken, conservatively, as the area of the stiffeners divided by the spacing $s_{st}$;" *into:* "This may be taken as the area of a stiffener smeared over the length of the spacing $s_{st}$;".

*Paragraph* '(1)', *Equation* '(3.2)', *add to the list under* 'where:':

"

$s_e$ is the length of the stiff bearing;

$s_{st}$ is the spacing of stiffeners;

".

## 7) Modification to Subclause 4.2

*Paragraph* '(1)', *change* "using the effective areas" *into:* "using the effective$^p$ areas".

## 8) Modification to Subclause 4.3

*Paragraph* '(6)', *entry* 'b)', *delete:* "(rather than $f_{yw}$)".

Documento contenuto nel prodotto EUROCODICI edizione 2011. E' vietato l'uso in rete del singolo documento e la sua riproduzione. E' autorizzata la stampa per uso interno.



## 9) Modifications to Subclause 4.4

*Paragraph* '(2)', *Equation* '(4.2)', *change* "$\bar{\lambda}_p \leq 0{,}673$" *into:* "$\bar{\lambda}_p \leq 0{,}5 + \sqrt{0.085 - 0.055\psi}$".

*Paragraph* '(2)', *Equation* '(4.2)', *change* "$\bar{\lambda}_p > 0{,}673$" *into:* "$\bar{\lambda}_p > 0{,}5 + \sqrt{0.085 - 0.055\psi}$".

*Paragraph* '(2)', *Equation* '(4.2)', *delete:* ", where $(3 + \psi) \geq 0$".

'Table 4.1', *second row from the bottom, change* "-1 > $\psi$ > -3" *into:* "-1 > $\psi$ $\geq$-3".

## 10) Modifications to Subclause 4.5.1

*Paragraph* '(2)', *last line, change* "$\rho$" *into:* "$\rho_c$".

*Paragraph* '(3)', *change* "section areas" *into:* "section area".

## 11) Modification to Subclause 4.5.3

*Paragraph* '(3)', 'NOTE', *change* "$b_{s11}$" *into:* "$b_{s\ell,1}$".

## 12) Modifications to Subclause 4.6

*Paragraph* '(1)', *change* "for uniaxial bending" *into:* "for compression and uniaxial bending".

*Paragraph* '(1)', 'NOTE', *change* "$e_{yN}$" *into:* "$e_{y,N}$".

*Paragraph* '(1)', 'NOTE', *change* "$e_{zN}$" *into:* "$e_{z,N}$".

## 13) Modifications to Subclause 5.3

*Paragraph* '(3)', *first line, change* "slenderness parameter" *into:* "modified slenderness".

*Paragraph* '(3)', 'NOTE 2', *change* "slenderness parameter" *into:* "modified slenderness".

*Paragraph* '(5)', *change two times* "slenderness parameter" *into:* "modified slenderness".

## 14) Modifications to Subclause 6.5

*Paragraph* '(3)', *change* "equations (6.11), (6.12) and (6.13)" *into:* "equations (6.11) and (6.12)".

*Paragraph* '(3)', *Equation* '(6.13)', *add before* '$l_e$ = .....(6.13)' *the word:* "where".

## 15) Modification to Subclause 6.6

*Paragraph* '(1)', *change the reference to* "6.2(2)" *into:* "6.2(1)".

## 16) Modification to Subclause 7.1

*Paragraph* '(1)', *add after the equation for* '$\overline{\eta_3}$': "for $V_{bw,Rd}$ see expression (5.2)."

Documento contenuto nel prodotto EUROCODICI edizione 2011. E' vietato l'uso in rete del singolo documento e la sua riproduzione. E' autorizzata la stampa per uso interno.


## 17) Modification to Subclause 9.2.4

'Figure 9.4', *change* "$\leq \frac{h_s}{4}$" *into:* "$\leq \frac{h_s}{4}$".

## 18) Modifications to Clause 10

*Paragraph* '(3)', *change* "plate slenderness" *into:* "modified plate slenderness".

*Paragraph* '(5)', *entry* 'a)', *change* "slenderness" *into:* "modified plate slenderness".

*Paragraph* '(5)', *entry* 'a)', *change reference to* "5.2(1)" *into:* "5.3(1)".

*Paragraph* '(6)', *below Equation* '(10.6)', *change* "$\tau_{cr,\tau}$" *into:* "$\tau_{cr}$".

*Paragraph* '(6)', *below Equation* '(10.6)', *change* "$\tau_{\tau,Ed}$" *into:* "$\tau_{Ed}$".

## 19) Modifications to Clause A.1

*Paragraph* '(2)', 'NOTE 3', *change* "the width b in" *into:* "the width *b* in".

*Paragraph* '(2)', *below Equation* '(A.2)', *change* "$\delta = \frac{\Sigma A_{sl}}{A_p}$" *into:* "$\delta = \frac{A_{sl}}{A_p}$".

*Paragraph* '(2)', *below Equation* '(A.2)', *under* "where:", *change* "$= \frac{bt^3}{12(1-\upsilon^2)} = \frac{bt^3}{10,92}$" *into:* "$= \frac{bt^3}{12(1-\nu^2)} = \frac{bt^3}{10,92}$".

*Paragraph* '(2)', *below Equation* '(A.2)', *under* "where:", *change* "$\Sigma A_{sl}$" *into:* "$A_{sl}$".

*Paragraph* '(2)', 'Figure A.1', *change in the top right text* "stiffeners" *into:* "stiffener".

*Paragraph* '(2)', 'Figure A.1', *change in the top right text* "columns" *into:* "column".

*Paragraph* '(2)', 'Figure A.1', *change in the figure* "$b_{s1,1}$" *into:* "$b_{s\ell,1}$".

## 20) Modifications to Subclause A.2.1

*Paragraph* '(6)', 'Figure A.2', *change* "$A_{sl,1}$" *into:* "$A_{s\ell,1}$".

*Paragraph* '(7)', *list entry* 'a)', *change* "$I_{sl}$" *into:* "$I_{s\ell}$".

## 21) Modification to Subclause A.2.2

*Paragraph* '(1)', *Equation* '(A.4)', *second line of the equation, change* "$a \leq a_c$" *into:* "$a < a_c$".

*Paragraph* '(1)', *delete the final* 'NOTE'.

Documento contenuto nel prodotto EUROCODICI edizione 2011. E' vietato l'uso in rete del singolo documento e la sua riproduzione. E' autorizzata la stampa per uso interno.



## 22) Modification to Clause A.3

*Paragraph* '(1)', *below Equation* '(A.5)', *under* "where:", *change* "For webs with two or more" *into:* "For webs with".

## 23) Modifications to Clause B.2

*Paragraph* '(1)', *change* " $\alpha_{crit}$ " *into:* " $\alpha_{cr}$ ".

*Paragraph* '(1)', *definition of* " $\alpha_{cr}$ ", *change* "elastic critical resistance" *into:* "elastic critical loading".

## 24) Modification to Clause D.1

'Figure D.1', *left-hand sketch, delete symbol* "$b_t$".

## 25) Modifications to Subclause D.2.1

*Paragraph* '(1)', *first line, and Equation* '(D.1)', *change two times* "$M_{Rd}$" *into:* "$My,_{Rd}$".

*Paragraph* '(2)', *change* "The buckling factor $k_\sigma$ should be taken as the larger of:" *into:* " The buckling factor $k_\sigma$ should be taken as the larger of a) and b):".

*Paragraph* '(2)', *list entry* 'b)', *delete* "where $b = \frac{b_1}{2}$ ".

## 26) Modifications to Subclause D.2.2

*Paragraph* '(1)', *first line and Equation* '(D.4)', *change* "$V_{Rd}$" *into:* "$V_{bw,Rd}$".

*Equations* '(D.6)' *and* '(D.9)', *change* "$f_y$" *into:* "$f_{yw}$".

Documento contenuto nel prodotto EUROCODICI edizione 2011. E' vietato l'uso in rete del singolo documento e la sua riproduzione. E' autorizzata la stampa per uso interno.

Documento contenuto nel prodotto EUROCODICI edizione 2011. E' vietato l'uso in rete del singolo documento e la sua riproduzione. E' autorizzata la stampa per uso interno.

EUROPEAN STANDARD

NORME EUROPÉENNE

EUROPÄISCHE NORM

# EN 1993-1-5

October 2006

ICS 91.010.30; 91.080.10

Supersedes ENV 1993-1-5:1997

English Version

# Eurocode 3 - Design of steel structures - Part 1-5: Plated structural elements

Eurocode 3 - Calcul des structures en acier - Partie 1-5: Plaques planes

Eurocode 3 - Bemessung und konstruktion von Stahlbauten - Teil 1-5: Plattenbeulen

This European Standard was approved by CEN on 13 January 2006.

CEN members are bound to comply with the CEN/CENELEC Internal Regulations which stipulate the conditions for giving this European Standard the status of a national standard without any alteration. Up-to-date lists and bibliographical references concerning such national standards may be obtained on application to the Central Secretariat or to any CEN member.

This European Standard exists in three official versions (English, French, German). A version in any other language made by translation under the responsibility of a CEN member into its own language and notified to the Central Secretariat has the same status as the official versions.

CEN members are the national standards bodies of Austria, Belgium, Cyprus, Czech Republic, Denmark, Estonia, Finland, France, Germany, Greece, Hungary, Iceland, Ireland, Italy, Latvia, Lithuania, Luxembourg, Malta, Netherlands, Norway, Poland, Portugal, Romania, Slovakia, Slovenia, Spain, Sweden, Switzerland and United Kingdom.

EUROPEAN COMMITTEE FOR STANDARDIZATION
COMITÉ EUROPÉEN DE NORMALISATION
EUROPÄISCHES KOMITEE FÜR NORMUNG

**Management Centre: rue de Stassart, 36 B-1050 Brussels**

© 2006 CEN All rights of exploitation in any form and by any means reserved worldwide for CEN national Members.

Ref. No. EN 1993-1-5:2006: E

Documento contenuto nel prodotto EUROCODICI edizione 2011. E' vietato l'uso in rete del singolo documento e la sua riproduzione. E' autorizzata la stampa per uso interno.



# Content


| | Page |
|---|---|
| **1 Introduction** | **5** |
| 1.1 Scope | 5 |
| 1.2 Normative references | 5 |
| 1.3 Terms and definitions | 5 |
| 1.4 Symbols | 6 |
| **2 Basis of design and modelling** | **7** |
| 2.1 General | 7 |
| 2.2 Effective width models for global analysis | 7 |
| 2.3 Plate buckling effects on uniform members | 7 |
| 2.4 Reduced stress method | 8 |
| 2.5 Non uniform members | 8 |
| 2.6 Members with corrugated webs | 8 |
| **3 Shear lag in member design** | **9** |
| 3.1 General | 9 |
| 3.2 Effective$^{s}$ width for elastic shear lag | 9 |
| 3.3 Shear lag at the ultimate limit state | 12 |
| **4 Plate buckling effects due to direct stresses at the ultimate limit state** | **13** |
| 4.1 General | 13 |
| 4.2 Resistance to direct stresses | 13 |
| 4.3 Effective cross section | 13 |
| 4.4 Plate elements without longitudinal stiffeners | 15 |
| 4.5 Stiffened plate elements with longitudinal stiffeners | 18 |
| 4.6 Verification | 21 |
| **5 Resistance to shear** | **21** |
| 5.1 Basis | 21 |
| 5.2 Design resistance | 22 |
| 5.3 Contribution from the web | 22 |
| 5.4 Contribution from flanges | 25 |
| 5.5 Verification | 25 |
| **6 Resistance to transverse forces** | **25** |
| 6.1 Basis | 25 |
| 6.2 Design resistance | 26 |
| 6.3 Length of stiff bearing | 26 |
| 6.4 Reduction factor $\chi_F$ for effective length for resistance | 27 |
| 6.5 Effective loaded length | 27 |
| 6.6 Verification | 28 |
| **7 Interaction** | **28** |
| 7.1 Interaction between shear force, bending moment and axial force | 28 |
| 7.2 Interaction between transverse force, bending moment and axial force | 29 |
| **8 Flange induced buckling** | **29** |
| **9 Stiffeners and detailing** | **30** |
| 9.1 General | 30 |
| 9.2 Direct stresses | 30 |
| 9.3 Shear | 34 |
| 9.4 Transverse loads | 35 |
| **10 Reduced stress method** | **36** |
| **Annex A (informative) Calculation of critical stresses for stiffened plates** | **38** |

Documento contenuto nel prodotto EUROCODICI edizione 2011. E' vietato l'uso in rete del singolo documento e la sua riproduzione. E' autorizzata la stampa per uso interno.



**Annex B (informative) Non uniform members** 43

**Annex C (informative) Finite Element Methods of Analysis (FEM)** 45

**Annex D (informative) Plate girders with corrugated webs** 50

**Annex E (normative) Alternative methods for determining effective cross sections** 53

Documento contenuto nel prodotto EUROCODICI edizione 2011. E' vietato l'uso in rete del singolo documento e la sua riproduzione. E' autorizzata la stampa per uso interno.



## Foreword

This European Standard EN 1993-1-5,, Eurocode 3: Design of steel structures Part 1.5: Plated structural elements, has been prepared by Technical Committee CEN/TC250 « Structural Eurocodes », the Secretariat of which is held by BSI. CEN/TC250 is responsible for all Structural Eurocodes.

This European Standard shall be given the status of a National Standard, either by publication of an identical text or by endorsement, at the latest by April 2007 and conflicting National Standards shall be withdrawn at latest by March 2010.

This Eurocode supersedes ENV 1993-1-5.

According to the CEN-CENELEC Internal Regulations, the National Standard Organizations of the following countries are bound to implement this European Standard: Austria, Belgium, Cyprus, Czech Republic, Denmark, Estonia, Finland, France, Germany, Greece, Hungary, Iceland, Ireland, Italy, Latvia, Lithuania, Luxembourg, Malta, Netherlands, Norway, Poland, Portugal, Romania, Slovakia, Slovenia, Spain, Sweden, Switzerland and United Kingdom.

## National annex for EN 1993-1-5

This standard gives alternative procedures, values and recommendations with notes indicating where national choices may have to be made. The National Standard implementing EN 1993-1-5 should have a National Annex containing all Nationally Determined Parameters to be used for the design of steel structures to be constructed in the relevant country.

National choice is allowed in EN 1993-1-5 through:

- 2.2(5)
- 3.3(1)
- 4.3(6)
- 5.1(2)
- 6.4(2)
- 8(2)
- 9.1(1)
- 9.2.1(9)
- 10(1)
- 10(5)
- C.2(1)
- C.5(2)
- C.8(1)
- C.9(3)
- D.2.2(2)

Documento contenuto nel prodotto EUROCODICI edizione 2011. E' vietato l'uso in rete del singolo documento e la sua riproduzione. E' autorizzata la stampa per uso interno.



# 1 Introduction

## 1.1 Scope

(1) EN 1993-1-5 gives design requirements of stiffened and unstiffened plates which are subject to in-plane forces.

(2) Effects due to shear lag, in-plane load introduction and plate buckling for I-section girders and box girders are covered. Also covered are plated structural components subject to in-plane loads as in tanks and silos. The effects of out-of-plane loading are outside the scope of this document.

**NOTE 1:** The rules in this part complement the rules for class 1, 2, 3 and 4 sections, see EN 1993-1-1.

**NOTE 2:** For the design of slender plates which are subject to repeated direct stress and/or shear and also fatigue due to out-of-plane bending of plate elements (breathing) see EN 1993-2 and EN 1993-6.

**NOTE 3:** For the effects of out-of-plane loading and for the combination of in-plane effects and out-of-plane loading effects see EN 1993-2 and EN 1993-1-7.

**NOTE 4:** Single plate elements may be considered as flat where the curvature radius r satisfies:

$$r \geq \frac{a^2}{t} \tag{1.1}$$

where $a$ is the panel width

$t$ is the plate thickness

## 1.2 Normative references

(1) This European Standard incorporates, by dated or undated reference, provisions from other publications. These normative references are cited at the appropriate places in the text and the publications are listed hereafter. For dated references, subsequent amendments to or revisions of any of these publications apply to this European Standard only when incorporated in it by amendment or revision. For undated references the latest edition of the publication referred to applies.

EN 1993-1-1 *Eurocode 3 :Design of steel structures: Part 1-1: General rules and rules for buildings*

## 1.3 Terms and definitions

For the purpose of this standard, the following terms and definitions apply:

**1.3.1**
**elastic critical stress**
stress in a component at which the component becomes unstable when using small deflection elastic theory of a perfect structure

**1.3.2**
**membrane stress**
stress at mid-plane of the plate

**1.3.3**
**gross cross-section**
the total cross-sectional area of a member but excluding discontinuous longitudinal stiffeners

**1.3.4**
**effective cross-section and effective width**
the gross cross-section or width reduced for the effects of plate buckling or shear lag or both; to distinguish between their effects the word “effective” is clarified as follows:
“effective$^{p}$“ denotes effects of plate buckling

Documento contenuto nel prodotto EUROCODICI edizione 2011. E' vietato l'uso in rete del singolo documento e la sua riproduzione. E' autorizzata la stampa per uso interno.



"effective$^{s}$" denotes effects of shear lag
"effective" denotes effects of plate buckling and shear lag

**1.3.5**
**plated structure**
a structure built up from nominally flat plates which are connected together; the plates may be stiffened or unstiffened

**1.3.6**
**stiffener**
a plate or section attached to a plate to resist buckling or to strengthen the plate; a stiffener is denoted:

- longitudinal if its direction is parallel to the member;
- transverse if its direction is perpendicular to the member.

**1.3.7**
**stiffened plate**
plate with transverse or longitudinal stiffeners or both

**1.3.8**
**subpanel**
unstiffened plate portion surrounded by flanges and/or stiffeners

**1.3.9**
**hybrid girder**
girder with flanges and web made of different steel grades; this standard assumes higher steel grade in flanges compared to webs

**1.3.10**
**sign convention**
unless otherwise stated compression is taken as positive

## 1.4 Symbols

(1) In addition to those given in EN 1990 and EN 1993-1-1, the following symbols are used:

$A_{s\ell}$ total area of all the longitudinal stiffeners of a stiffened plate;

$A_{st}$ gross cross sectional area of one transverse stiffener;

$A_{eff}$ effective cross sectional area;

$A_{c,eff}$ effective$^{p}$ cross sectional area;

$A_{c,eff,loc}$ effective$^{p}$ cross sectional area for local buckling;

$a$ length of a stiffened or unstiffened plate;

$b$ width of a stiffened or unstiffened plate;

$b_w$ clear width between welds;

$b_{eff}$ effective$^{s}$ width for elastic shear lag;

$F_{Ed}$ design transverse force;

$h_w$ clear web depth between flanges;

$L_{eff}$ effective length for resistance to transverse forces, see 6;

$M_{f.Rd}$ design plastic moment of resistance of a cross-section consisting of the flanges only;

$M_{pl.Rd}$ design plastic moment of resistance of the cross-section (irrespective of cross-section class);

$M_{Ed}$ design bending moment;

$N_{Ed}$ design axial force;

$t$ thickness of the plate;

Documento contenuto nel prodotto EUROCODICI edizione 2011. E' vietato l'uso in rete del singolo documento e la sua riproduzione. E' autorizzata la stampa per uso interno.



$V_{Ed}$ design shear force including shear from torque;

$W_{eff}$ effective elastic section modulus;

$\beta$ effective[s] width factor for elastic shear lag;

(2) Additional symbols are defined where they first occur.

# 2 Basis of design and modelling

## 2.1 General

(1)P The effects of shear lag and plate buckling shall be taken into account at the ultimate, serviceability or fatigue limit states.

**NOTE:** Partial factors $\gamma_{M0}$ and $\gamma_{M1}$ used in this part are defined for different applications in the National Annexes of EN 1993-1 to EN 1993-6.

## 2.2 Effective width models for global analysis

(1)P The effects of shear lag and of plate buckling on the stiffness of members and joints shall be taken into account in the global analysis.

(2) The effects of shear lag of flanges in global analysis may be taken into account by the use of an effective[s] width. For simplicity this effective[s] width may be assumed to be uniform over the length of the span.

(3) For each span of a member the effective[s] width of flanges should be taken as the lesser of the full width and $L/8$ per side of the web, where L is the span or twice the distance from the support to the end of a cantilever.

(4) The effects of plate buckling in elastic global analysis may be taken into account by effective[p] cross sectional areas of the elements in compression, see 4.3.

(5) For global analysis the effect of plate buckling on the stiffness may be ignored when the effective[p] cross-sectional area of an element in compression is larger than $\rho_{lim}$ times the gross cross-sectional area of the same element.

**NOTE 1:** The parameter $\rho_{lim}$ may be given in the National Annex. The value $\rho_{lim}$ = 0,5 is recommended.

**NOTE 2:** For determining the stiffness when (5) is not fulfilled, see Annex E.

## 2.3 Plate buckling effects on uniform members

(1) Effective[p] width models for direct stresses, resistance models for shear buckling and buckling due to transverse loads as well as interactions between these models for determining the resistance of uniform members at the ultimate limit state may be used when the following conditions apply:

- panels are rectangular and flanges are parallel;
- the diameter of any unstiffened open hole or cut out does not exceed 0,05$b$, where b is the width of the panel.

**NOTE:** The rules may apply to non rectangular panels provided the angle $\alpha_{limit}$ (see Figure 2.1) is not greater than 10 degrees. If $\alpha_{limit}$ exceeds 10, panels may be assessed assuming it to be a rectangular panel based on the larger of $b_1$ and $b_2$ of the panel.

Documento contenuto nel prodotto EUROCODICI edizione 2011. E' vietato l'uso in rete del singolo documento e la sua riproduzione. E' autorizzata la stampa per uso interno.



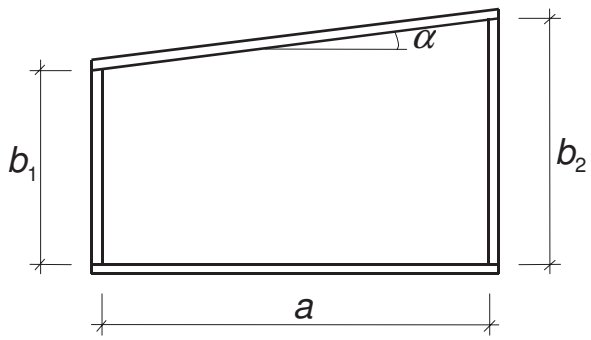


**Figure 2.1: Definition of angle $\alpha$**

(2) For the calculation of stresses at the serviceability and fatigue limit state the effective[s] area may be used if the condition in 3.1 is fulfilled. For ultimate limit states the effective area according to 3.3 should be used with $\beta$ replaced by $\beta_{ult}$.

## 2.4 Reduced stress method

(1) As an alternative to the use of the effective[p] width models for direct stresses given in sections 4 to 7, the cross sections may be assumed to be class 3 sections provided that the stresses in each panel do not exceed the limits specified in section 10.

**NOTE:** The reduced stress method is analogous to the effective[p] width method (see 2.3) for single plated elements. However, in verifying the stress limitations no load shedding has been assumed between the plated elements of the cross section.

## 2.5 Non uniform members

(1) Non uniform members (e.g. haunched members, non rectangular panels) or members with regular or irregular large openings may be analysed using Finite Element (FE) methods.

**NOTE 1:** See Annex B for non uniform members.

**NOTE 2:** For FE-calculations see Annex C.

## 2.6 Members with corrugated webs

(1) For members with corrugated webs, the bending stiffness should be based on the flanges only and webs should be considered to transfer shear and transverse loads.

**NOTE:** For plate buckling resistance of flanges in compression and the shear resistance of webs see Annex D.

Documento contenuto nel prodotto EUROCODICI edizione 2011. E' vietato l'uso in rete del singolo documento e la sua riproduzione. E' autorizzata la stampa per uso interno.



# 3 Shear lag in member design

## 3.1 General

(1) Shear lag in flanges may be neglected if $b_0 < L_e/50$ where $b_0$ is taken as the flange outstand or half the width of an internal element and $L_e$ is the length between points of zero bending moment, see 3.2.1(2).

(2) Where the above limit for $b_0$ is exceeded the effects due to shear lag in flanges should be considered at serviceability and fatigue limit state verifications by the use of an effective[s] width according to 3.2.1 and a stress distribution according to 3.2.2. For the ultimate limit state verification an effective area according to 3.3 may be used.

(3) Stresses due to patch loading in the web applied at the flange level should be determined from 3.2.3.

## 3.2 Effective[s] width for elastic shear lag

### 3.2.1 Effective width

(1) The effective[s] width $b_{eff}$ for shear lag under elastic conditions should be determined from:

$$b_{eff} = \beta\, b_0 \tag{3.1}$$

where the effective[s] factor $\beta$ is given in Table 3.1.

This effective width may be relevant for serviceability and fatigue limit states.

(2) Provided adjacent spans do not differ more than 50% and any cantilever span is not larger than half the adjacent span the effective lengths $L_e$ may be determined from Figure 3.1. For all other cases $L_e$ should be taken as the distance between adjacent points of zero bending moment.

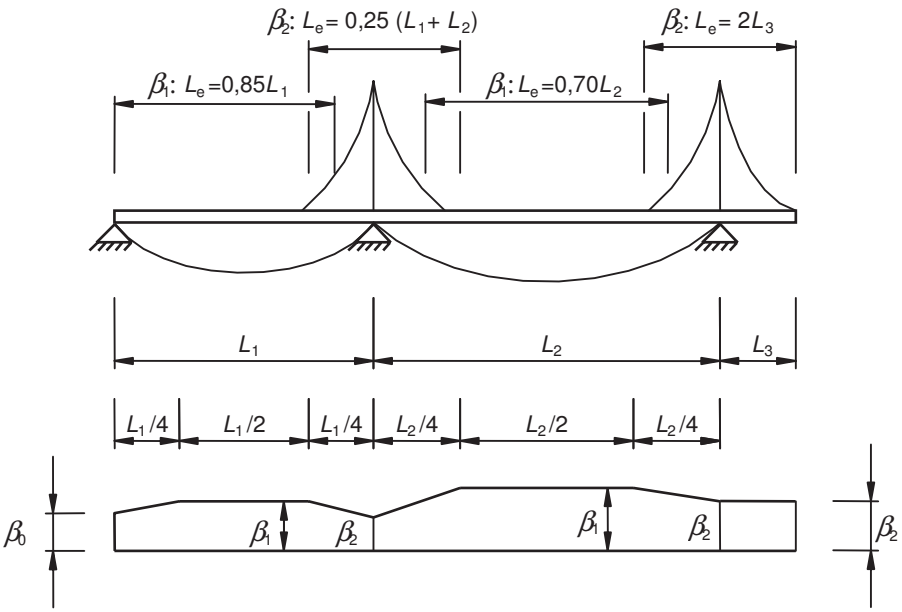


**Figure 3.1: Effective length $L_e$ for continuous beam and distribution of effective[s] width**

Documento contenuto nel prodotto EUROCODICI edizione 2011. E' vietato l'uso in rete del singolo documento e la sua riproduzione. E' autorizzata la stampa per uso interno.



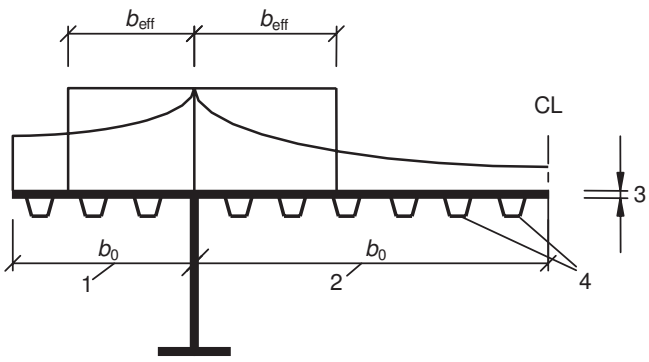


*1 for flange outstand*
*2 for internal flange*
*3 plate thickness t*
*4 stiffeners with* $A_{s\ell} = \sum A_{s\ell i}$

**Figure 3.2: Notations for shear lag**

**Table 3.1: Effective[s] width factor $\beta$**

| $\kappa$ | Verification | $\beta$ – value |
|---|---|---|
| $\kappa \leq 0{,}02$ | | $\beta = 1{,}0$ |
| $0{,}02 < \kappa \leq 0{,}70$ | sagging bending | $\beta = \beta_1 = \dfrac{1}{1 + 6{,}4\,\kappa^2}$ |
| | hogging bending | $\beta = \beta_2 = \dfrac{1}{1 + 6{,}0\left(\kappa - \dfrac{1}{2500\,\kappa}\right) + 1{,}6\,\kappa^2}$ |
| $> 0{,}70$ | sagging bending | $\beta = \beta_1 = \dfrac{1}{5{,}9\,\kappa}$ |
| | hogging bending | $\beta = \beta_2 = \dfrac{1}{8{,}6\,\kappa}$ |
| all $\kappa$ | end support | $\beta_0 = (0{,}55 + 0{,}025 / \kappa)\,\beta_1$, but $\beta_0 < \beta_1$ |
| all $\kappa$ | Cantilever | $\beta = \beta_2$ at support and at the end |

$\kappa = \alpha_0\, b_0 / L_e$ with $\alpha_0 = \sqrt{1 + \dfrac{A_{s\ell}}{b_0 t}}$

in which $A_{s\ell}$ is the area of all longitudinal stiffeners within the width $b_0$ and other symbols are as defined in Figure 3.1 and Figure 3.2.

Documento contenuto nel prodotto EUROCODICI edizione 2011. E' vietato l'uso in rete del singolo documento e la sua riproduzione. E' autorizzata la stampa per uso interno.



### 3.2.2 Stress distribution due to shear lag

(1) The distribution of longitudinal stresses across the flange plate due to shear lag should be obtained from Figure 3.3.

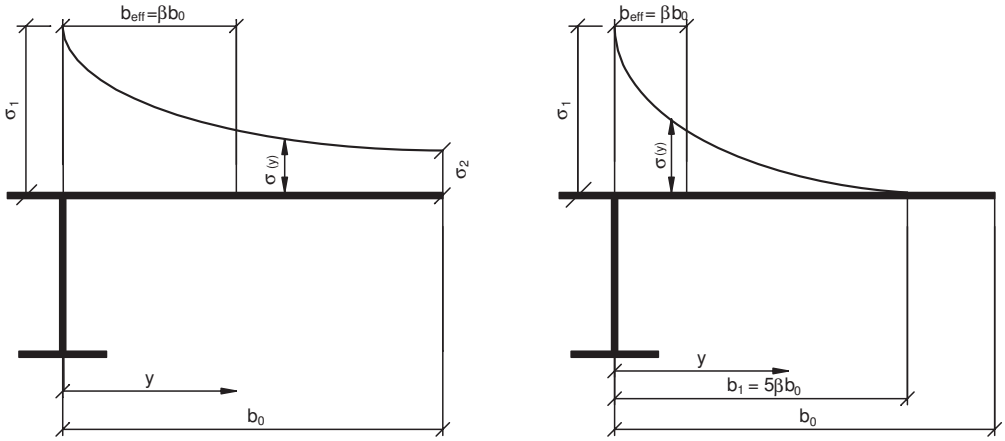


$\beta > 0{,}20$:

$\sigma_2 = 1{,}25\,(\beta - 0{,}20)\,\sigma_1$

$\sigma(y) = \sigma_2 + (\sigma_1 - \sigma_2)\,(1 - y/b_0)^4$

$\beta \le 0{,}20$:

$\sigma_2 = 0$

$\sigma(y) = \sigma_1 (1 - y/b_1)^4$

$\sigma_1$ is calculated with the effective width of the flange $b_{eff}$

**Figure 3.3: Distribution of stresses due to shear lag**

### 3.2.3 In-plane load effects

(1) The elastic stress distribution in a stiffened or unstiffened plate due to the local introduction of in-plane forces (patch loads), see Figure 3.4, should be determined from:

$$\sigma_{z,Ed} = \frac{F_{Ed}}{b_{eff}\left(t_w + a_{st,l}\right)} \tag{3.2}$$

with: $b_{eff} = s_e \sqrt{1 + \left(\frac{z}{s_e\, n}\right)^2}$

$$n = 0{,}636 \sqrt{1 + \frac{0{,}878\, a_{st,1}}{t_w}}$$

$$s_e = s_s + 2\, t_f$$

where $a_{st,1}$ is the gross cross-sectional area of the stiffeners smeared over the length $s_e$. This may be taken, conservatively, as the area of the stiffeners divided by the spacing $s_{st}$;

$t_w$ is the web thickness;

$z$ is the distance to flange.

**NOTE:** The equation (3.2) is valid when $s_{st}/s_e \le 0{,}5$; otherwise the contribution of stiffeners should be neglected.

Documento contenuto nel prodotto EUROCODICI edizione 2011. E' vietato l'uso in rete del singolo documento e la sua riproduzione. E' autorizzata la stampa per uso interno.



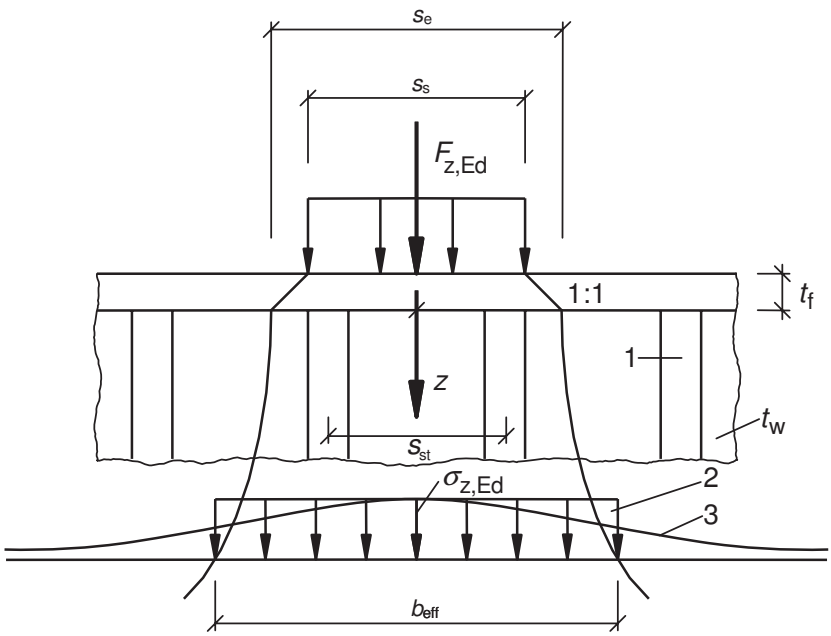


*1 stiffener*
*2 simplified stress distribution*
*3 actual stress distribution*

**Figure 3.4: In-plane load introduction**

**NOTE:** The above stress distribution may also be used for the fatigue verification.

## 3.3 Shear lag at the ultimate limit state

(1) At the ultimate limit state shear lag effects may be determined as follows:

a) elastic shear lag effects as determined for serviceability and fatigue limit states,

b) combined effects of shear lag and of plate buckling,

c) elastic-plastic shear lag effects allowing for limited plastic strains.

**NOTE 1:** The National Annex may choose the method to be applied. Unless specified otherwise in EN 1993-2 to EN 1993-6, the method in NOTE 3 is recommended.

**NOTE 2:** The combined effects of plate buckling and shear lag may be taken into account by using $A_{eff}$ as given by:

$$A_{eff} = A_{c,eff}\,\beta_{ult} \tag{3.3}$$

where $A_{c,eff}$ is the effective[p] area of the compression flange due to plate buckling (see 4.4 and 4.5);

$\beta_{ult}$ is the effective[s] width factor for the effect of shear lag at the ultimate limit state, which may be taken as β determined from Table 3.1 with $\alpha_0$ replaced by

$$\alpha_0^* = \sqrt{\frac{A_{c,eff}}{b_0\, t_f}} \tag{3.4}$$

$t_f$ is the flange thickness.

Documento contenuto nel prodotto EUROCODICI edizione 2011. E' vietato l'uso in rete del singolo documento e la sua riproduzione. E' autorizzata la stampa per uso interno.



**NOTE 3:** Elastic-plastic shear lag effects allowing for limited plastic strains may be taken into account using $A_{eff}$ as follows:

$$A_{eff} = A_{c,eff}\beta^{\kappa} \geq A_{c,eff}\beta \tag{3.5}$$

where $\beta$ and $\kappa$ are taken from Table 3.1.

The expressions in NOTE 2 and NOTE 3 may also be applied for flanges in tension in which case $A_{c,eff}$ should be replaced by the gross area of the tension flange.

# 4 Plate buckling effects due to direct stresses at the ultimate limit state

## 4.1 General

(1) This section gives rules to account for plate buckling effects from direct stresses at the ultimate limit state when the following criteria are met:

a) The panels are rectangular and flanges are parallel or nearly parallel (see 2.3);

b) Stiffeners, if any, are provided in the longitudinal or transverse direction or both;

c) Open holes and cut outs are small (see 2.3);

d) Members are of uniform cross section;

e) No flange induced web buckling occurs.

**NOTE 1:** For compression flange buckling in the plane of the web see section 8.

**NOTE 2:** For stiffeners and detailing of plated members subject to plate buckling see section 9.

## 4.2 Resistance to direct stresses

(1) The resistance of plated members may be determined using the effective areas of plate elements in compression for class 4 sections using cross sectional data ($A_{eff}$, $I_{eff}$, $W_{eff}$) for cross sectional verifications and member verifications for column buckling and lateral torsional buckling according to EN 1993-1-1.

(2) Effective[p] areas should be determined on the basis of the linear strain distributions with the attainment of yield strain in the mid plane of the compression plate.

## 4.3 Effective cross section

(1) In calculating longitudinal stresses, account should be taken of the combined effect of shear lag and plate buckling using the effective areas given in 3.3.

(2) The effective cross sectional properties of members should be based on the effective areas of the compression elements and on the effective[s] area of the tension elements due to shear lag.

(3) The effective area $A_{eff}$ should be determined assuming that the cross section is subject only to stresses due to uniform axial compression. For non-symmetrical cross sections the possible shift $e_N$ of the centroid of the effective area $A_{eff}$ relative to the centre of gravity of the gross cross-section, see Figure 4.1, gives an additional moment which should be taken into account in the cross section verification using 4.6.

(4) The effective section modulus $W_{eff}$ should be determined assuming the cross section is subject only to bending stresses, see Figure 4.2. For biaxial bending effective section moduli should be determined about both main axes.

**NOTE:** As an alternative to 4.3(3) and (4) a single effective section may be determined from $N_{Ed}$ and $M_{Ed}$ acting simultaneously. The effects of $e_N$ should be taken into account as in 4.3(3). This requires an iterative procedure.

Documento contenuto nel prodotto EUROCODICI edizione 2011. E' vietato l'uso in rete del singolo documento e la sua riproduzione. E' autorizzata la stampa per uso interno.



(5) The stress in a flange should be calculated using the elastic section modulus with reference to the mid-plane of the flange.

(6) Hybrid girders may have flange material with yield strength $f_{yf}$ up to $\phi_h \times f_{yw}$ provided that:

a) the increase of flange stresses caused by yielding of the web is taken into account by limiting the stresses in the web to $f_{yw}$ ;

b) $f_{yf}$ (rather than $f_{yw}$) is used in determining the effective area of the web.

**NOTE:** The National Annex may specify the value $\phi_h$. A value of $\phi_h$ = 2,0 is recommended.

(7) The increase of deformations and of stresses at serviceability and fatigue limit states may be ignored for hybrid girders complying with 4.3(6) including the NOTE.

(8) For hybrid girders complying with 4.3(6) the stress range limit in EN 1993-1-9 may be taken as $1{,}5 f_{yf}$.

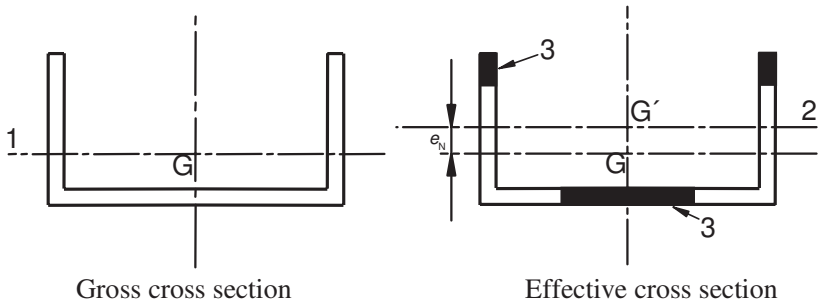


*G centroid of the gross cross section*
*G´ centroid of the effective cross section*
*1 centroidal axis of the gross cross section*
*2 centroidal axis of the effective cross section*
*3 non effective zone*

**Figure 4.1: Class 4 cross-sections - axial force**

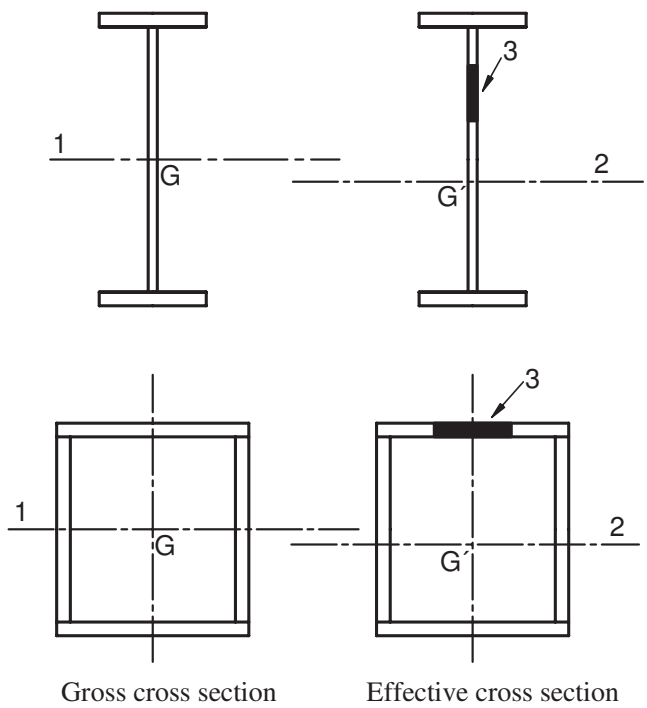


*G centroid of the gross cross section*
*G´ centroid of the effective cross section*
*1 centroidal axis of the gross cross section*
*2 centroidal axis of the effective cross section*
*3 non effective zone*

**Figure 4.2: Class 4 cross-sections - bending moment**

Documento contenuto nel prodotto EUROCODICI edizione 2011. E' vietato l'uso in rete del singolo documento e la sua riproduzione. E' autorizzata la stampa per uso interno.



## 4.4 Plate elements without longitudinal stiffeners

(1) The effective[p] areas of flat compression elements should be obtained using Table 4.1 for internal elements and Table 4.2 for outstand elements. The effective[p] area of the compression zone of a plate with the gross cross-sectional area $A_c$ should be obtained from:

$$A_{c,eff} = \rho A_c \tag{4.1}$$

where $\rho$ is the reduction factor for plate buckling.

(2) The reduction factor ρ may be taken as follows:

– internal compression elements:

$$\rho = 1{,}0 \qquad \text{for } \bar{\lambda}_p \le 0{,}673$$

$$\rho = \frac{\bar{\lambda}_p - 0{,}055\,(3+\psi)}{\bar{\lambda}_p^2} \le 1{,}0 \qquad \text{for } \bar{\lambda}_p > 0{,}673 \text{ , where } (3+\psi) \ge 0 \tag{4.2}$$

– outstand compression elements:

$$\rho = 1{,}0 \qquad \text{for } \bar{\lambda}_p \le 0{,}748$$

$$\rho = \frac{\bar{\lambda}_p - 0{,}188}{\bar{\lambda}_p^2} \le 1{,}0 \qquad \text{for } \bar{\lambda}_p > 0{,}748 \tag{4.3}$$

where $\bar{\lambda}_p = \sqrt{\dfrac{f_y}{\sigma_{cr}}} = \dfrac{\bar{b}/t}{28{,}4\,\varepsilon\sqrt{k_\sigma}}$

$\psi$ is the stress ratio determined in accordance with 4.4(3) and 4.4(4)

$\bar{b}$ is the appropriate width to be taken as follows (for definitions, see Table 5.2 of EN 1993-1-1)

- $b_w$ for webs;
- $b$ for internal flange elements (except RHS);
- $b$ - 3 t for flanges of RHS;
- $c$ for outstand flanges;
- $h$ for equal-leg angles;
- $h$ for unequal-leg angles;

$k_\sigma$ is the buckling factor corresponding to the stress ratio $\psi$ and boundary conditions. For long plates $k_\sigma$ is given in Table 4.1 or Table 4.2 as appropriate;

$t$ is the thickness;

$\sigma_{cr}$ is the elastic critical plate buckling stress see equation (A.1) in Annex A.1(2) and Table 4.1 and Table 4.2;

$$\varepsilon = \sqrt{\frac{235}{f_y\left[N/mm^2\right]}}$$

(3) For flange elements of I-sections and box girders the stress ratio $\psi$ used in Table 4.1 and Table 4.2 should be based on the properties of the gross cross-sectional area, due allowance being made for shear lag in the flanges if relevant. For web elements the stress ratio $\psi$ used in Table 4.1 should be obtained using a stress distribution based on the effective area of the compression flange and the gross area of the web.

**NOTE:** If the stress distribution results from different stages of construction (as e.g. in a composite bridge) the stresses from the various stages may first be calculated with a cross section consisting of effective flanges and

Documento contenuto nel prodotto EUROCODICI edizione 2011. E' vietato l'uso in rete del singolo documento e la sua riproduzione. E' autorizzata la stampa per uso interno.



gross web and these stresses are added together. This resulting stress distribution determines an effective web section that can be used for all stages to calculate the final stress distribution for stress analysis.

(4) Except as given in 4.4(5), the plate slenderness $\bar{\lambda}_p$ of an element may be replaced by:

$$\bar{\lambda}_{p,red} = \bar{\lambda}_p \sqrt{\frac{\sigma_{com,Ed}}{f_y / \gamma_{M0}}} \tag{4.4}$$

where $\sigma_{com,Ed}$ is the maximum design compressive stress in the element determined using the effective[p] area of the section caused by all simultaneous actions.

**NOTE 1:** The above procedure is conservative and requires an iterative calculation in which the stress ratio $\psi$ (see Table 4.1 and Table 4.2) is determined at each step from the stresses calculated on the effective[p] cross-section defined at the end of the previous step.

**NOTE 2:** See also alternative procedure in Annex E.

(5) For the verification of the design buckling resistance of a class 4 member using 6.3.1, 6.3.2 or 6.3.4 of EN 1993-1-1, either the plate slenderness $\bar{\lambda}_p$ or $\bar{\lambda}_{p,red}$ with $\sigma_{com,Ed}$ based on second order analysis with global imperfections should be used.

(6) For aspect ratios $a/b < 1$ a column type of buckling may occur and the check should be performed according to 4.5.4 using the reduction factor $\rho_c$.

**NOTE:** This applies e.g. for flat elements between transverse stiffeners where plate buckling could be column-like and require a reduction factor $\rho_c$ close to $\chi_c$ as for column buckling, see Figure 4.3 a) and b). For plates with longitudinal stiffeners column type buckling may also occur for $a/b \geq 1$, see Figure 4.3 c).

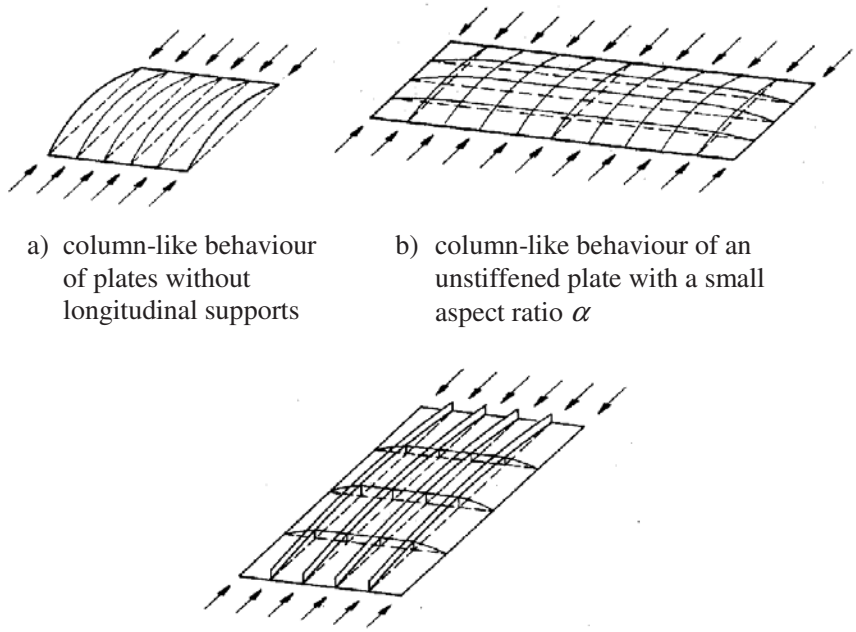

a) column-like behaviour of plates without longitudinal supports

b) column-like behaviour of an unstiffened plate with a small aspect ratio $\alpha$

c) column-like behaviour of a longitudinally stiffened plate with a large aspect ratio $\alpha$

**Figure 4.3: Column-like behaviour**

Documento contenuto nel prodotto EUROCODICI edizione 2011. E' vietato l'uso in rete del singolo documento e la sua riproduzione. E' autorizzata la stampa per uso interno.



## Table 4.1: Internal compression elements

| Stress distribution (compression positive) | Effective[p] width $b_{eff}$ |
|---|---|
| 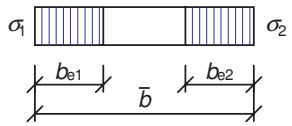 | $\underline{\psi = 1}$:<br>$b_{eff} = \rho\ \bar{b}$<br>$b_{e1} = 0{,}5\ b_{eff}$ $\quad b_{e2} = 0{,}5\ b_{eff}$ |
| 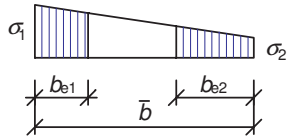 | $\underline{1 > \psi \geq 0}$:<br>$b_{eff} = \rho\ \bar{b}$<br>$b_{e1} = \dfrac{2}{5-\psi} b_{eff}$ $\quad b_{e2} = b_{eff} - b_{e1}$ |
| 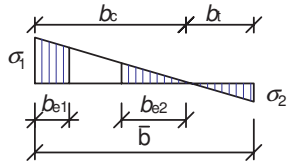 | $\underline{\psi < 0}$:<br>$b_{eff} = \rho\ b_c = \rho\ \bar{b} / (1-\psi)$<br>$b_{e1} = 0{,}4\ b_{eff}$ $\quad b_{e2} = 0{,}6\ b_{eff}$ |

| $\psi = \sigma_2/\sigma_1$ | 1 | $1 > \psi > 0$ | 0 | $0 > \psi > -1$ | -1 | $-1 > \psi > -3$ |
|---|---|---|---|---|---|---|
| Buckling factor $k_\sigma$ | 4,0 | $8{,}2 / (1{,}05 + \psi)$ | 7,81 | $7{,}81 - 6{,}29\psi + 9{,}78\psi^2$ | 23,9 | $5{,}98\ (1 - \psi)^2$ |

## Table 4.2: Outstand compression elements

| Stress distribution (compression positive) | Effective[p] width $b_{eff}$ |
|---|---|
| 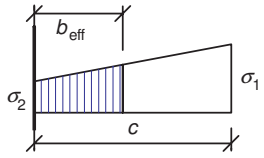 | $\underline{1 > \psi \geq 0}$:<br>$b_{eff} = \rho\ c$ |
| 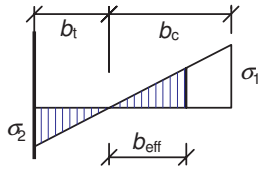 | $\underline{\psi < 0}$:<br>$b_{eff} = \rho\ b_c = \rho\ c / (1-\psi)$ |

| $\psi = \sigma_2/\sigma_1$ | 1 | 0 | -1 | $1 \geq \psi \geq -3$ |
|---|---|---|---|---|
| Buckling factor $k_\sigma$ | 0,43 | 0,57 | 0,85 | $0{,}57 - 0{,}21\psi + 0{,}07\psi^2$ |

| | |
|---|---|
| 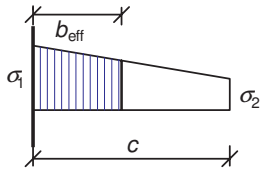 | $\underline{1 > \psi \geq 0}$:<br>$b_{eff} = \rho\ c$ |
| 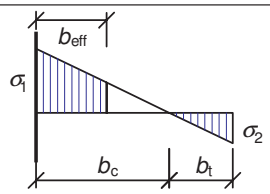 | $\underline{\psi < 0}$:<br>$b_{eff} = \rho\ b_c = \rho\ c / (1-\psi)$ |

| $\psi = \sigma_2/\sigma_1$ | 1 | $1 > \psi > 0$ | 0 | $0 > \psi > -1$ | -1 |
|---|---|---|---|---|---|
| Buckling factor $k_\sigma$ | 0,43 | $0{,}578 / (\psi + 0{,}34)$ | 1,70 | $1{,}7 - 5\psi + 17{,}1\psi^2$ | 23,8 |

Documento contenuto nel prodotto EUROCODICI edizione 2011. E' vietato l'uso in rete del singolo documento e la sua riproduzione. E' autorizzata la stampa per uso interno.



## 4.5 Stiffened plate elements with longitudinal stiffeners

### 4.5.1 General

(1) For plates with longitudinal stiffeners the effective[p] areas from local buckling of the various subpanels between the stiffeners and the effective[p] areas from the global buckling of the stiffened panel should be accounted for.

(2) The effective[p] section area of each subpanel should be determined by a reduction factor in accordance with 4.4 to account for local plate buckling. The stiffened plate with effective[p] section areas for the stiffeners should be checked for global plate buckling (by modelling it as an equivalent orthotropic plate) and a reduction factor ρ should be determined for overall plate buckling.

(3) The effective[p] area of the compression zone of the stiffened plate should be taken as:

$$A_{c,eff} = \rho_c \; A_{c,eff,loc} + \sum b_{edge,eff}\, t \tag{4.5}$$

where $A_{c,eff,loc}$ is the effective[p] section areas of all the stiffeners and subpanels that are fully or partially in the compression zone except the effective parts supported by an adjacent plate element with the width $b_{edge,eff}$, see example in Figure 4.4.

(4) The area $A_{c,eff,loc}$ should be obtained from:

$$A_{c,eff,loc} = A_{s\ell,eff} + \sum_c \rho_{loc}\; b_{c,loc}\; t \tag{4.6}$$

where $\sum_c$ applies to the part of the stiffened panel width that is in compression except the parts $b_{edge,eff}$, see Figure 4.4;

$A_{s\ell,eff}$ is the sum of the effective[p] sections according to 4.4 of all longitudinal stiffeners with gross area $A_{s\ell}$ located in the compression zone;

$b_{c,loc}$ is the width of the compressed part of each subpanel;

$\rho_{loc}$ is the reduction factor from 4.4(2) for each subpanel.

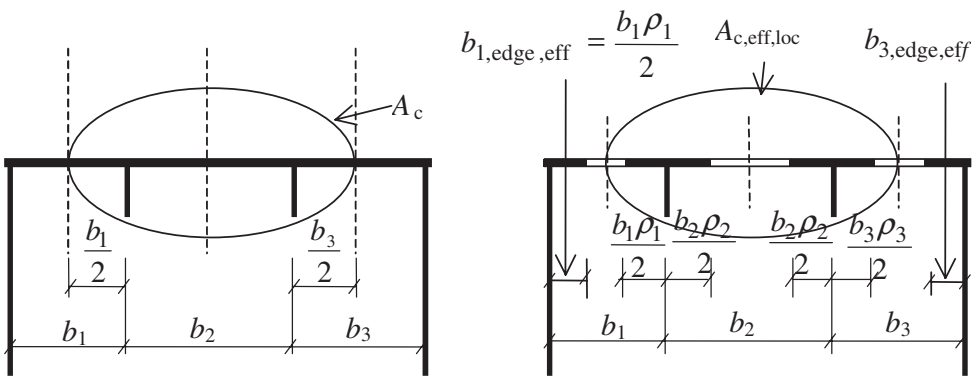


**Figure 4.4: Stiffened plate under uniform compression**

**NOTE:** For non-uniform compression see Figure A.1.

Documento contenuto nel prodotto EUROCODICI edizione 2011. E' vietato l'uso in rete del singolo documento e la sua riproduzione. E' autorizzata la stampa per uso interno.



(5) In determining the reduction factor $\rho_c$ for overall buckling, the reduction factor for column-type buckling, which is more severe than the reduction factor than for plate buckling, should be considered.

(6) Interpolation should be carried out in accordance with 4.5.4(1) between the reduction factor $\rho$ for plate buckling and the reduction factor $\chi_c$ for column buckling to determine $\rho_c$ see 4.5.4.

(7) The reduction of the compressed area $A_{c,eff,loc}$ through $\rho_c$ may be taken as a uniform reduction across the whole cross section.

(8) If shear lag is relevant (see 3.3), the effective cross-sectional area $A_{c,eff}$ of the compression zone of the stiffened plate should then be taken as $A^*_{c,eff}$ accounting not only for local plate buckling effects but also for shear lag effects.

(9) The effective cross-sectional area of the tension zone of the stiffened plate should be taken as the gross area of the tension zone reduced for shear lag if relevant, see 3.3.

(10) The effective section modulus $W_{eff}$ should be taken as the second moment of area of the effective cross section divided by the distance from its centroid to the mid depth of the flange plate.

### 4.5.2 Plate type behaviour

(1) The relative plate slenderness $\bar{\lambda}_p$ of the equivalent plate is defined as:

$$\bar{\lambda}_p = \sqrt{\frac{\beta_{A,c}\ f_y}{\sigma_{cr,p}}} \tag{4.7}$$

with $\beta_{A,c} = \dfrac{A_{c,eff,loc}}{A_c}$

where $A_c$ is the gross area of the compression zone of the stiffened plate except the parts of subpanels supported by an adjacent plate, see Figure 4.4 (to be multiplied by the shear lag factor if shear lag is relevant, see 3.3);

$A_{c,eff,loc}$ is the effective area of the same part of the plate (including shear lag effect, if relevant) with due allowance made for possible plate buckling of subpanels and/or stiffeners.

(2) The reduction factor ρ for the equivalent orthotropic plate is obtained from 4.4(2) provided $\bar{\lambda}_p$ is calculated from equation (4.7).

**NOTE:** For calculation of $\sigma_{cr,p}$ see Annex A.

### 4.5.3 Column type buckling behaviour

(1) The elastic critical column buckling stress $\sigma_{cr,c}$ of an unstiffened (see 4.4) or stiffened (see 4.5) plate should be taken as the buckling stress with the supports along the longitudinal edges removed.

(2) For an unstiffened plate the elastic critical column buckling stress $\sigma_{cr,c}$ may be obtained from

$$\sigma_{cr,c} = \frac{\pi^2\ E\ t^2}{12\left(1-\nu^2\right)a^2} \tag{4.8}$$

(3) For a stiffened plate $\sigma_{cr,c}$ may be determined from the elastic critical column buckling stress $\sigma_{cr,sl}$ of the stiffener closest to the panel edge with the highest compressive stress as follows:

$$\sigma_{cr,s\ell} = \frac{\pi^2\ E\ I_{s\ell,1}}{A_{s\ell,1}\ a^2} \tag{4.9}$$

Documento contenuto nel prodotto EUROCODICI edizione 2011. E' vietato l'uso in rete del singolo documento e la sua riproduzione. E' autorizzata la stampa per uso interno.



where $I_{s\ell,1}$ is the second moment of area of the gross cross section of the stiffener and the adjacent parts of the plate, relative to the out-of-plane bending of the plate;

$A_{s\ell,1}$ is the gross cross-sectional area of the stiffener and the adjacent parts of the plate according to Figure A.1.

**NOTE:** $\sigma_{cr,c}$ may be obtained from $\sigma_{cr,c} = \sigma_{cr,s\ell} \dfrac{b_c}{b_{s\ell,1}}$ , where $\sigma_{cr,c}$ is related to the compressed edge of the plate, and , $b_{sl1}$ and $b_c$ are geometric values from the stress distribution used for the extrapolation, see Figure A.1.

(4) The relative column slenderness $\bar{\lambda}_c$ is defined as follows:

$$\bar{\lambda}_c = \sqrt{\frac{f_y}{\sigma_{cr,c}}} \quad \text{for unstiffened plates} \tag{4.10}$$

$$\bar{\lambda}_c = \sqrt{\frac{\beta_{A,c}\, f_y}{\sigma_{cr,c}}} \quad \text{for stiffened plates} \tag{4.11}$$

with $\beta_{A,c} = \dfrac{A_{s\ell,1,eff}}{A_{s\ell,1}}$ ;

$A_{s\ell,1}$ is defined in 4.5.3(3);

$A_{s\ell,1,eff}$ is the effective cross-sectional area of the stiffener and the adjacent parts of the plate with due allowance for plate buckling, see Figure A.1.

(5) The reduction factor $\chi_c$ should be obtained from 6.3.1.2 of EN 1993-1-1. For unstiffened plates $\alpha = 0{,}21$ corresponding to buckling curve a should be used. For stiffened plates its value should be increased to:

$$\alpha_e = \alpha + \frac{0{,}09}{i/e} \tag{4.12}$$

with $i = \sqrt{\dfrac{I_{s\ell,1}}{A_{s\ell,1}}}$

$e$ = max ($e_1$, $e_2$) is the largest distance from the respective centroids of the plating and the one-sided stiffener (or of the centroids of either set of stiffeners when present on both sides) to the neutral axis of the effective column, see Figure A.1;

$\alpha$ = 0,34 (curve b) for closed section stiffeners;

= 0,49 (curve c) for open section stiffeners.

### 4.5.4 Interaction between plate and column buckling

(1) The final reduction factor $\rho_c$ should be obtained by interpolation between $\chi_c$ and $\rho$ as follows:

$$\rho_c = (\rho - \chi_c)\,\xi\,(2 - \xi) + \chi_c \tag{4.13}$$

where $\xi = \dfrac{\sigma_{cr,p}}{\sigma_{cr,c}} - 1$ but $0 \le \xi \le 1$

$\sigma_{cr,p}$ is the elastic critical plate buckling stress, see Annex A.1(2);

$\sigma_{cr,c}$ is the elastic critical column buckling stress according to 4.5.3(2) and (3), respectively;

Documento contenuto nel prodotto EUROCODICI edizione 2011. E' vietato l'uso in rete del singolo documento e la sua riproduzione. E' autorizzata la stampa per uso interno.



$\chi_c$ is the reduction factor due to column buckling.

$\rho$ is the reduction factor due to plate buckling, see 4.4(1).

## 4.6 Verification

(1) Member verification for uniaxial bending should be performed as follows:

$$\eta_1 = \frac{N_{Ed}}{\dfrac{f_y\ A_{eff}}{\gamma_{M0}}} + \frac{M_{Ed} + N_{Ed}\ e_N}{\dfrac{f_y\ W_{eff}}{\gamma_{M0}}} \leq 1{,}0 \tag{4.14}$$

where $A_{eff}$ is the effective cross-section area in accordance with 4.3(3);

$e_N$ is the shift in the position of neutral axis, see 4.3(3);

$M_{Ed}$ is the design bending moment;

$N_{Ed}$ is the design axial force;

$W_{eff}$ is the effective elastic section modulus, see 4.3(4);

$\gamma_{M0}$ is the partial factor, see application parts EN 1993-2 to 6.

**NOTE:** For members subject to compression and biaxial bending the above equation (4.14) may be modified as follows:

$$\eta_1 = \frac{N_{Ed}}{\dfrac{f_y\ A_{eff}}{\gamma_{M0}}} + \frac{M_{y,Ed} + N_{Ed}\ e_{y,N}}{\dfrac{f_y\ W_{y,eff}}{\gamma_{M0}}} + \frac{M_{z,Ed} + N_{Ed}\ e_{z,N}}{\dfrac{f_y\ W_{z,eff}}{\gamma_{M0}}} \leq 1{,}0 \tag{4.15}$$

$M_{y,Ed}$, $M_{z,Ed}$ are the design bending moments with respect to y–y and z–z axes respectively;

$e_{yN}$, $e_{zN}$ are the eccentricities with respect to the neutral axis.

(2) Action effects $M_{Ed}$ and $N_{Ed}$ should include global second order effects where relevant.

(3) The plate buckling verification of the panel should be carried out for the stress resultants at a distance 0,4a or 0,5b, whichever is the smallest, from the panel end where the stresses are the greater. In this case the gross sectional resistance needs to be checked at the end of the panel.

# 5 Resistance to shear

## 5.1 Basis

(1) This section gives rules for shear resistance of plates considering shear buckling at the ultimate limit state where the following criteria are met:

a) the panels are rectangular within the angle limit stated in 2.3;

b) stiffeners, if any, are provided in the longitudinal or transverse direction or both;

c) all holes and cut outs are small (see 2.3);

d) members are of uniform cross section.

(2) Plates with $h_w/t$ greater than $\frac{72}{\eta}\varepsilon$ for an unstiffened web, or $\frac{31}{\eta}\varepsilon\sqrt{k_\tau}$ for a stiffened web, should be checked for resistance to shear buckling and should be provided with transverse stiffeners at the supports, where $\varepsilon = \sqrt{\dfrac{235}{f_y\left[N/mm^2\right]}}$.

Documento contenuto nel prodotto EUROCODICI edizione 2011. E' vietato l'uso in rete del singolo documento e la sua riproduzione. E' autorizzata la stampa per uso interno.



**NOTE 1:** $h_w$ see Figure 5.1 and for $k_\tau$ see 5.3(3).

**NOTE 2:** The National Annex will define $\eta$. The value $\eta$ = 1,20 is recommended for steel grades up to and including S460. For higher steel grades $\eta$ = 1,00 is recommended.

## 5.2 Design resistance

(1) For unstiffened or stiffened webs the design resistance for shear should be taken as:

$$V_{b,Rd} = V_{bw,Rd} + V_{bf,Rd} \leq \frac{\eta\, f_{yw}\, h_w\, t}{\sqrt{3}\, \gamma_{M1}} \tag{5.1}$$

in which the contribution from the web is given by:

$$V_{bw,Rd} = \frac{\chi_w\, f_{yw}\, h_w\, t}{\sqrt{3}\, \gamma_{M1}} \tag{5.2}$$

and the contribution from the flanges $V_{bf,Rd}$ is according to 5.4.

(2) Stiffeners should comply with the requirements in 9.3 and welds should fulfil the requirement given in 9.3.5.

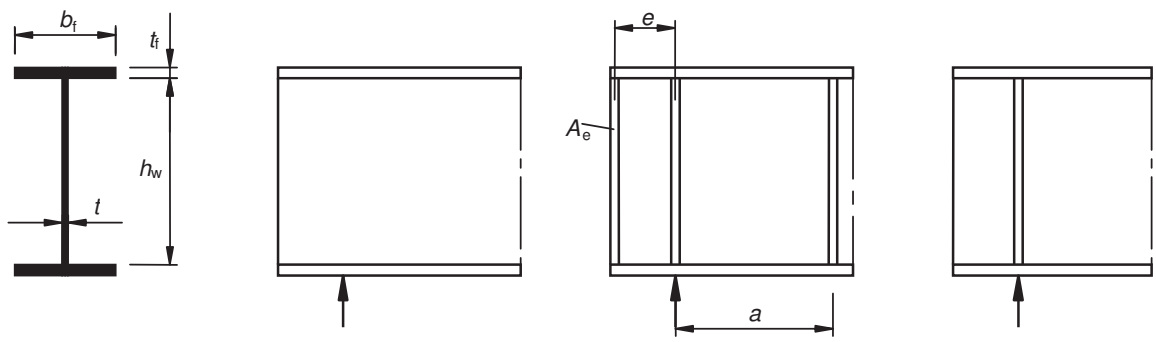


Cross section notations a) No end post b) Rigid end post c) Non-rigid end post

**Figure 5.1: End supports**

## 5.3 Contribution from the web

(1) For webs with transverse stiffeners at supports only and for webs with either intermediate transverse stiffeners or longitudinal stiffeners or both, the factor $\chi_w$ for the contribution of the web to the shear buckling resistance should be obtained from Table 5.1 or Figure 5.2.

**Table 5.1: Contribution from the web $\chi_w$ to shear buckling resistance**

| | Rigid end post | Non-rigid end post |
|---|---|---|
| $\bar{\lambda}_w < 0{,}83/\eta$ | $\eta$ | $\eta$ |
| $0{,}83/\eta \leq \bar{\lambda}_w < 1{,}08$ | $0{,}83/\bar{\lambda}_w$ | $0{,}83/\bar{\lambda}_w$ |
| $\bar{\lambda}_w \geq 1{,}08$ | $1{,}37/(0{,}7+\bar{\lambda}_w)$ | $0{,}83/\bar{\lambda}_w$ |

**NOTE:** See 6.2.6 in EN 1993-1-1.

Documento contenuto nel prodotto EUROCODICI edizione 2011. E' vietato l'uso in rete del singolo documento e la sua riproduzione. E' autorizzata la stampa per uso interno.



(2) Figure 5.1 shows various end supports for girders:

a) No end post, see 6.1 (2), type c);

b) Rigid end posts, see 9.3.1; this case is also applicable for panels at an intermediate support of a continuous girder;

c) Non rigid end posts see 9.3.2.

(3) The slenderness parameter $\bar{\lambda}_w$ in Table 5.1 and Figure 5.2 should be taken as:

$$\bar{\lambda}_w = 0{,}76\sqrt{\frac{f_{yw}}{\tau_{cr}}} \tag{5.3}$$

where $\tau_{cr} = k_\tau\ \sigma_E$ (5.4)

**NOTE 1:** Values for $\sigma_E$ and $k_\tau$ may be taken from Annex A.

**NOTE 2:** The slenderness parameter $\bar{\lambda}_w$ may be taken as follows:

a) transverse stiffeners at supports only:

$$\bar{\lambda}_w = \frac{h_w}{86{,}4\ t\ \varepsilon} \tag{5.5}$$

b) transverse stiffeners at supports and intermediate transverse or longitudinal stiffeners or both:

$$\bar{\lambda}_w = \frac{h_w}{37{,}4\ t\ \varepsilon\ \sqrt{k_\tau}} \tag{5.6}$$

in which $k_\tau$ is the minimum shear buckling coefficient for the web panel.

**NOTE 3:** Where non-rigid transverse stiffeners are also used in addition to rigid transverse stiffeners, $k_\tau$ is taken as the minimum of the values from the web panels between any two transverse stiffeners (e.g. $a_2 \times h_w$ and $a_3 \times h_w$) and that between two rigid stiffeners containing non-rigid transverse stiffeners (e.g. $a_4 \times h_w$).

**NOTE 4:** Rigid boundaries may be assumed for panels bordered by flanges and rigid transverse stiffeners. The web buckling analysis can then be based on the panels between two adjacent transverse stiffeners (e.g. $a_1 \times h_w$ in Figure 5.3).

**NOTE 5:** For non-rigid transverse stiffeners the minimum value $k_\tau$ may be obtained from the buckling analysis of the following:

1. a combination of two adjacent web panels with one flexible transverse stiffener
2. a combination of three adjacent web panels with two flexible transverse stiffeners

For procedure to determine $k_\tau$ see Annex A.3.

(4) The second moment of area of a longitudinal stiffener should be reduced to 1/3 of its actual value when calculating $k_\tau$. Formulae for $k_\tau$ taking this reduction into account in A.3 may be used.

Documento contenuto nel prodotto EUROCODICI edizione 2011. E' vietato l'uso in rete del singolo documento e la sua riproduzione. E' autorizzata la stampa per uso interno.



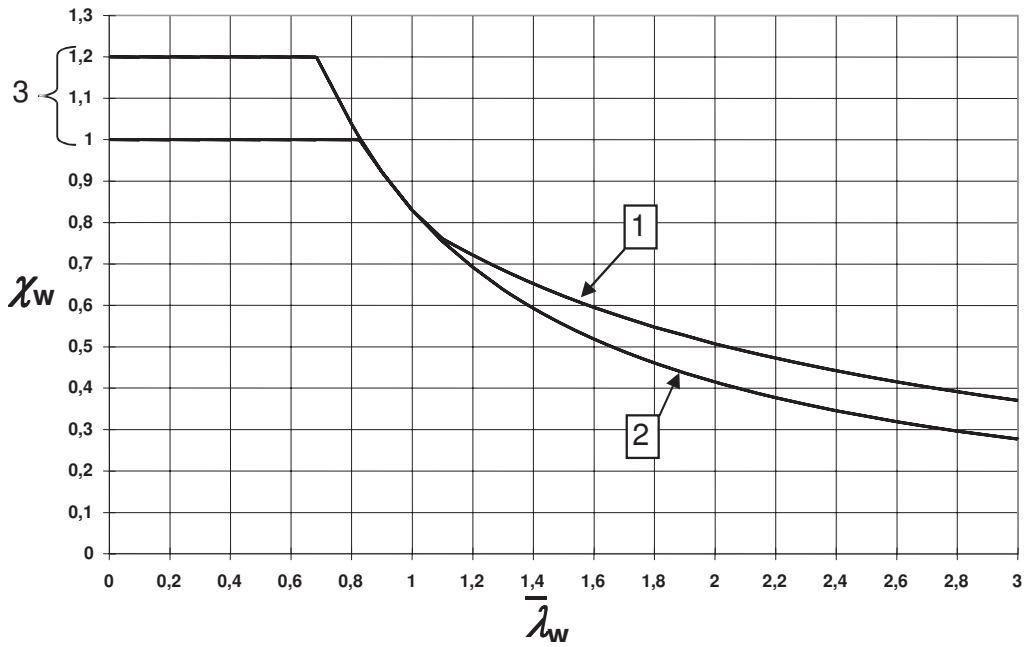


*1 Rigid end post*
*2 Non-rigid end post*
*3 Range of recommended η*

**Figure 5.2: Shear buckling factor $\chi_w$**

(5) For webs with longitudinal stiffeners the slenderness parameter $\bar{\lambda}_w$ in (3) should not be taken as less than

$$\bar{\lambda}_w = \frac{h_{wi}}{37{,}4\, t\, \varepsilon \sqrt{k_{\tau i}}} \tag{5.7}$$

where $h_{wi}$ and $k_{\tau i}$ refer to the subpanel with the largest slenderness parameter $\bar{\lambda}_w$ of all subpanels within the web panel under consideration.

**NOTE:** To calculate $k_{\tau i}$ the expression given in A.3 may be used with $k_{\tau st} = 0$.

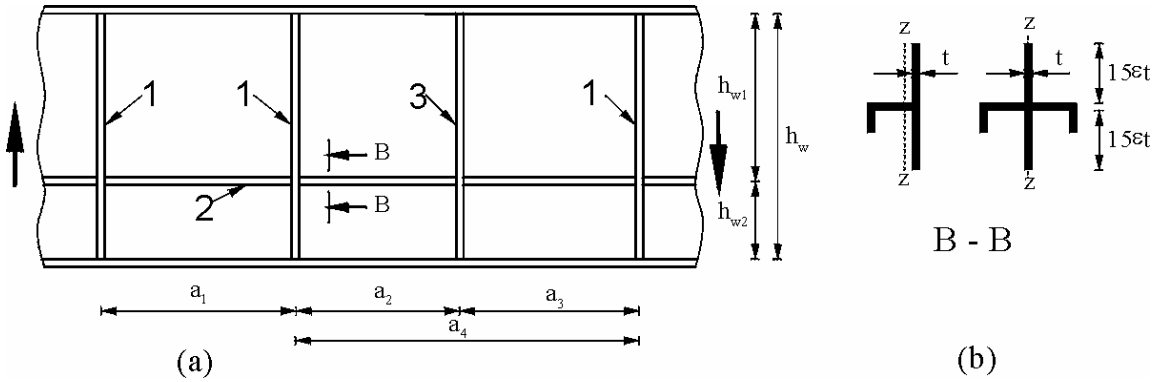


*1 Rigid transverse stiffener*
*2 Longitudinal stiffener*
*3 Non-rigid transverse stiffener*

Documento contenuto nel prodotto EUROCODICI edizione 2011. E' vietato l'uso in rete del singolo documento e la sua riproduzione. E' autorizzata la stampa per uso interno.



**Figure 5.3: Web with transverse and longitudinal stiffeners**

## 5.4 Contribution from flanges

(1) When the flange resistance is not completely utilized in resisting the bending moment ($M_{Ed} < M_{f,Rd}$) the contribution from the flanges should be obtained as follows:

$$V_{bf,Rd} = \frac{b_f\, t_f^2\, f_{yf}}{c\, \gamma_{M1}} \left( 1 - \left( \frac{M_{Ed}}{M_{f,Rd}} \right)^2 \right) \tag{5.8}$$

$b_f$ and $t_f$ are taken for the flange which provides the least axial resistance,

$b_f$ being taken as not larger than $15\varepsilon t_f$ on each side of the web,

$M_{f,Rd} = \dfrac{M_{f,k}}{\gamma_{M0}}$ is the moment of resistance of the cross section consisting of the effective area of the flanges only,

$$c = a \left( 0{,}25 + \frac{1{,}6\, b_f t_f^2\, f_{yf}}{t\, h_w^2\, f_{yw}} \right)$$

(2) When an axial force $N_{Ed}$ is present, the value of $M_{f,Rd}$ should be reduced by multiplying it by the following factor:

$$\left( 1 - \frac{N_{Ed}}{\dfrac{(A_{f1} + A_{f2})\, f_{yf}}{\gamma_{M0}}} \right) \tag{5.9}$$

where $A_{f1}$ and $A_{f2}$ are the areas of the top and bottom flanges respectively.

## 5.5 Verification

(1) The verification should be performed as follows:

$$\eta_3 = \frac{V_{Ed}}{V_{b,Rd}} \leq 1{,}0 \tag{5.10}$$

where $V_{Ed}$ is the design shear force including shear from torque.

# 6 Resistance to transverse forces

## 6.1 Basis

(1) The design resistance of the webs of rolled beams and welded girders should be determined in accordance with 6.2, provided that the compression flange is adequately restrained in the lateral direction.

(2) The load is applied as follows:

a) through the flange and resisted by shear forces in the web, see Figure 6.1 (a);

b) through one flange and transferred through the web directly to the other flange, see Figure 6.1 (b).

c) through one flange adjacent to an unstiffened end, see Figure 6.1 (c)

Documento contenuto nel prodotto EUROCODICI edizione 2011. E' vietato l'uso in rete del singolo documento e la sua riproduzione. E' autorizzata la stampa per uso interno.



(3) For box girders with inclined webs the resistance of both the web and flange should be checked. The internal forces to be taken into account are the components of the external load in the plane of the web and flange respectively.

(4) The interaction of the transverse force, bending moment and axial force should be verified using 7.2.

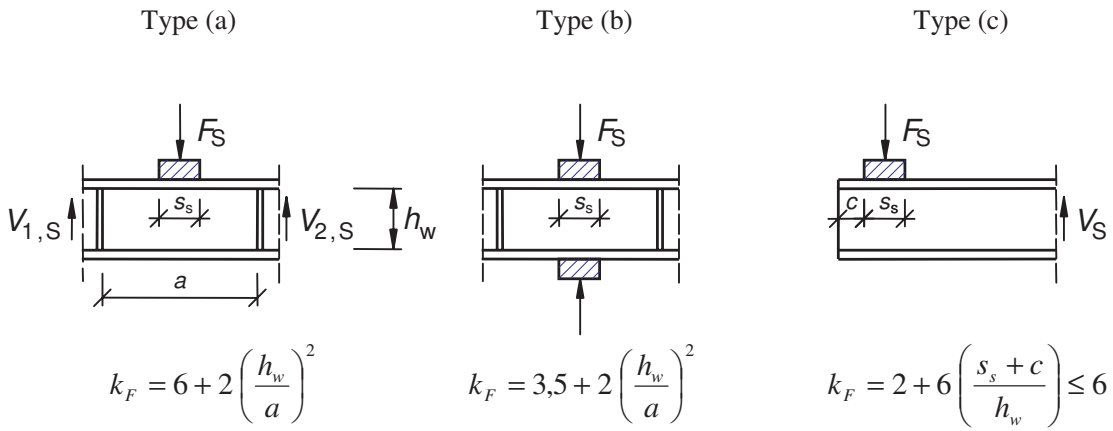


**Figure 6.1: Buckling coefficients for different types of load application**

## 6.2 Design resistance

(1) For unstiffened or stiffened webs the design resistance to local buckling under transverse forces should be taken as

$$F_{Rd} = \frac{f_{yw}\, L_{eff}\, t_w}{\gamma_{M1}} \tag{6.1}$$

where $t_w$ is the thickness of the web;

$f_{yw}$ is the yield strength of the web;

$L_{eff}$ is the effective length for resistance to transverse forces, which should be determined from

$$L_{eff} = \chi_F\, \ell_y \tag{6.2}$$

where $\ell_y$ is the effective loaded length, see 6.5, appropriate to the length of stiff bearing $s_s$, see 6.3;

$\chi_F$ is the reduction factor due to local buckling, see 6.4(1).

## 6.3 Length of stiff bearing

(1) The length of stiff bearing $s_s$ on the flange should be taken as the distance over which the applied load is effectively distributed at a slope of 1:1, see Figure 6.2. However, $s_s$ should not be taken as larger than $h_w$.

(2) If several concentrated forces are closely spaced, the resistance should be checked for each individual force as well as for the total load with $s_s$ as the centre-to-centre distance between the outer loads.

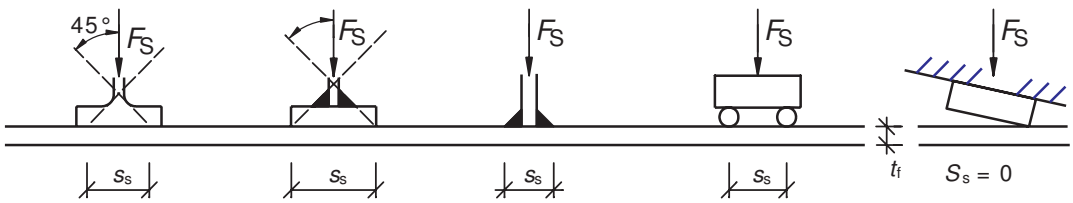


**Figure 6.2: Length of stiff bearing**

Documento contenuto nel prodotto EUROCODICI edizione 2011. E' vietato l'uso in rete del singolo documento e la sua riproduzione. E' autorizzata la stampa per uso interno.



(3) If the bearing surface of the applied load rests at an angle to the flange surface, see Figure 6.2, $s_s$ should be taken as zero.

## 6.4 Reduction factor $\chi_F$ for effective length for resistance

(1) The reduction factor $\chi_F$ should be obtained from:

$$\chi_F = \frac{0{,}5}{\bar{\lambda}_F} \leq 1{,}0 \tag{6.3}$$

where $\bar{\lambda}_F = \sqrt{\dfrac{\ell_y t_w f_{yw}}{F_{cr}}}$ (6.4)

$$F_{cr} = 0{,}9\, k_F E \frac{t_w^3}{h_w} \tag{6.5}$$

(2) For webs without longitudinal stiffeners $k_F$ should be obtained from Figure 6.1.

**NOTE:** For webs with longitudinal stiffeners information may be given in the National Annex. The following rules are recommended:

For webs with longitudinal stiffeners $k_F$ may be taken as

$$k_F = 6 + 2\left[\frac{h_w}{a}\right]^2 + \left[5{,}44\frac{b_1}{a} - 0{,}21\right]\sqrt{\gamma_s} \tag{6.6}$$

where $b_1$ is the depth of the loaded subpanel taken as the clear distance between the loaded flange and the stiffener

$$\gamma_s = 10{,}9\frac{I_{s\ell,1}}{h_w t_w^3} \leq 13\left[\frac{a}{h_w}\right]^3 + 210\left[0{,}3 - \frac{b_1}{a}\right] \tag{6.7}$$

where $I_{s\ell,1}$ is the second moment of area of the stiffener closest to the loaded flange including contributing parts of the web according to Figure 9.1.

Equation (6.6) is valid for $0{,}05 \leq \dfrac{b_1}{a} \leq 0{,}3$ and $\dfrac{b_1}{h_w} \leq 0{,}3$ and loading according to type a) in Figure 6.1.

(3) $\ell_y$ should be obtained from 6.5.

## 6.5 Effective loaded length

(1) The effective loaded length $\ell_y$ should be calculated as follows:

$$m_1 = \frac{f_{yf} b_f}{f_{yw} t_w} \tag{6.8}$$

$$m_2 = 0{,}02\left(\frac{h_w}{t_f}\right)^2 \quad \text{if } \bar{\lambda}_F > 0{,}5$$
$$m_2 = 0 \quad \text{if } \bar{\lambda}_F \leq 0{,}5 \tag{6.9}$$

For box girders, $b_f$ in equation (6.8) should be limited to $15\varepsilon t_f$ on each side of the web.

(2) For types a) and b) in Figure 6.1, $\ell_y$ should be obtained using:

$$\ell_y = s_s + 2\, t_f \left(1 + \sqrt{m_1 + m_2}\right) \text{, but } \ell_y \leq \text{ distance between adjacent transverse stiffeners} \tag{6.10}$$

Documento contenuto nel prodotto EUROCODICI edizione 2011. E' vietato l'uso in rete del singolo documento e la sua riproduzione. E' autorizzata la stampa per uso interno.



(3) For type c) $\ell_y$ should be taken as the smallest value obtained from the equations (6.11), (6.12) and (6.13).

$$\ell_y = \ell_e + t_f \sqrt{\frac{m_1}{2} + \left(\frac{\ell_e}{t_f}\right)^2 + m_2} \tag{6.11}$$

$$\ell_y = \ell_e + t_f \sqrt{m_1 + m_2} \tag{6.12}$$

$$\ell_e = \frac{k_F E\, t_w^2}{2\, f_{yw} h_w} \leq s_s + c \tag{6.13}$$

## 6.6 Verification

(1) The verification should be performed as follows:

$$\eta_2 = \frac{F_{Ed}}{\dfrac{f_{yw}\, L_{eff}\, t_w}{\gamma_{M1}}} \leq 1{,}0 \tag{6.14}$$

where $F_{Ed}$ is the design transverse force;

$L_{eff}$ is the effective length for resistance to transverse forces, see 6.2(2);

$t_w$ is the thickness of the plate.

# 7 Interaction

## 7.1 Interaction between shear force, bending moment and axial force

(1) Provided that $\bar{\eta}_3$ (see below) does not exceed 0,5 , the design resistance to bending moment and axial force need not be reduced to allow for the shear force. If $\bar{\eta}_3$ is more than 0,5 the combined effects of bending and shear in the web of an I or box girder should satisfy:

$$\bar{\eta}_1 + \left(1 - \frac{M_{f,Rd}}{M_{pl,Rd}}\right)\left(2\bar{\eta}_3 - 1\right)^2 \leq 1{,}0 \qquad for\ \bar{\eta}_1 \geq \frac{M_{f,Rd}}{M_{pl,Rd}} \tag{7.1}$$

where $M_{f,Rd}$ is the design plastic moment of resistance of the section consisting of the effective area of the flanges;

$M_{pl,Rd}$ is the design plastic resistance of the cross section consisting of the effective area of the flanges and the fully effective web irrespective of its section class.

$$\bar{\eta}_1 = \frac{M_{Ed}}{M_{pl,Rd}}$$

$$\bar{\eta}_3 = \frac{V_{Ed}}{V_{bw,Rd}}$$

In addition the requirements in sections 4.6 and 5.5 should be met.

Action effects should include global second order effects of members where relevant.

(2) The criterion given in (1) should be verified at all sections other than those located at a distance less than $h_w/2$ from a support with vertical stiffeners.

Documento contenuto nel prodotto EUROCODICI edizione 2011. E' vietato l'uso in rete del singolo documento e la sua riproduzione. E' autorizzata la stampa per uso interno.



(3) The plastic moment of resistance $M_{f,Rd}$ may be taken as the product of the yield strength, the effective area of the flange with the smallest value of $A_f f_y/\gamma_{M0}$ and the distance between the centroids of the flanges.

(4) If an axial force $N_{Ed}$ is present, $M_{pl,Rd}$ and $M_{f,Rd}$ should be reduced in accordance with 6.2.9 of EN 1993-1-1 and 5.4(2) respectively. When the axial force is so large that the whole web is in compression 7.1(5) should be applied.

(5) A flange in a box girder should be verified using 7.1(1) taking $M_{f,Rd} = 0$ and $\tau_{Ed}$ taken as the average shear stress in the flange which should not be less than half the maximum shear stress in the flange and $\overline{\eta}_1$ is taken as $\eta_1$ according to 4.6(1). In addition the subpanels should be checked using the average shear stress within the subpanel and $\chi_w$ determined for shear buckling of the subpanel according to 5.3, assuming the longitudinal stiffeners to be rigid.

## 7.2 Interaction between transverse force, bending moment and axial force

(1) If the girder is subjected to a concentrated transverse force acting on the compression flange in conjunction with bending and axial force, the resistance should be verified using 4.6, 6.6 and the following interaction expression:

$$\eta_2 + 0{,}8\,\eta_1 \leq 1{,}4 \tag{7.2}$$

(2) If the concentrated load is acting on the tension flange the resistance should be verified according to section 6. Additionally 6.2.1(5) of EN 1993-1-1 should be met.

# 8 Flange induced buckling

(1) To prevent the compression flange buckling in the plane of the web, the following criterion should be met:

$$\frac{h_w}{t_w} \leq k\,\frac{E}{f_{yf}}\sqrt{\frac{A_w}{A_{fc}}} \tag{8.1}$$

where $A_w$ is the cross section area of the web;

$A_{fc}$ is the effective cross section area of the compression flange;

$h_w$ is the depth of the web;

$t_w$ is the thickness of the web.

The value of the factor $k$ should be taken as follows:

- plastic rotation utilized $k = 0{,}3$
- plastic moment resistance utilized $k = 0{,}4$
- elastic moment resistance utilized $k = 0{,}55$

(2) When the girder is curved in elevation, with the compression flange on the concave face, the following criterion should be met:

$$\frac{h_w}{t_w} \leq \frac{k\,\dfrac{E}{f_{yf}}\sqrt{\dfrac{A_w}{A_{fc}}}}{\sqrt{1+\dfrac{h_w E}{3\,r\,f_{yf}}}} \tag{8.2}$$

$r$ is the radius of curvature of the compression flange.

**NOTE:** The National Annex may give further information on flange induced buckling.

Documento contenuto nel prodotto EUROCODICI edizione 2011. E' vietato l'uso in rete del singolo documento e la sua riproduzione. E' autorizzata la stampa per uso interno.



# 9 Stiffeners and detailing

## 9.1 General

(1) This section gives design rules for stiffeners in plated structures which supplement the plate buckling rules specified in sections 4 to 7.

**NOTE:** The National Annex may give further requirements on stiffeners for specific applications.

(2) When checking the buckling resistance, the section of a stiffener may be taken as the gross area comprising the stiffener plus a width of plate equal to $15\varepsilon t$ but not more than the actual dimension available, on each side of the stiffener avoiding any overlap of contributing parts to adjacent stiffeners, see Figure 9.1.

(3) The axial force in a transverse stiffener should be taken as the sum of the force resulting from shear (see 9.3.3(3)) and any external loads.

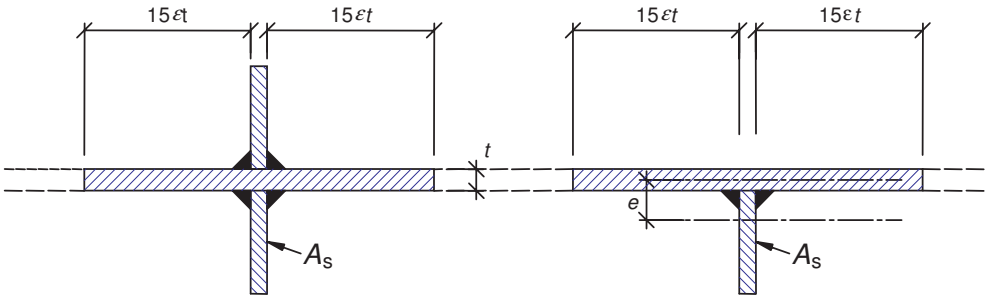


**Figure 9.1: Effective cross-section of stiffener**

## 9.2 Direct stresses

### 9.2.1 Minimum requirements for transverse stiffeners

(1) In order to provide a rigid support for a plate with or without longitudinal stiffeners, intermediate transverse stiffeners should satisfy the criteria given below.

(2) The transverse stiffener should be treated as a simply supported member subject to lateral loading with an initial sinusoidal imperfection $w_0$ equal to $s/300$, where $s$ is the smallest of $a_1$, $a_2$ or $b$, see Figure 9.2 , where $a_1$ and $a_2$ are the lengths of the panels adjacent to the transverse stiffener under consideration and $b$ is the height between the centroids of the flanges or span of the transverse stiffener. Eccentricities should be accounted for.

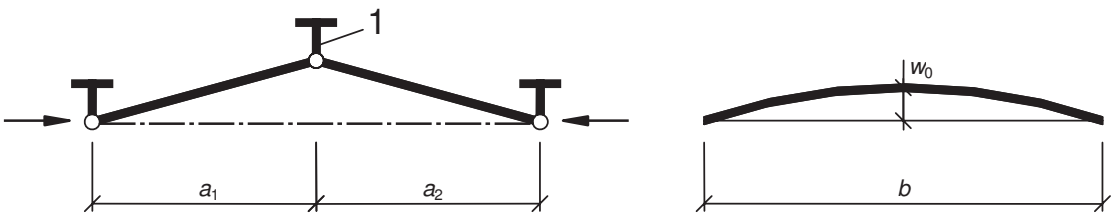


*1 Transverse stiffener*

**Figure 9.2: Transverse stiffener**

(3) The transverse stiffener should carry the deviation forces from the adjacent compressed panels under the assumption that both adjacent transverse stiffeners are rigid and straight together with any external load

Documento contenuto nel prodotto EUROCODICI edizione 2011. E' vietato l'uso in rete del singolo documento e la sua riproduzione. E' autorizzata la stampa per uso interno.



and axial force according to the NOTE to 9.3.3(3). The compressed panels and the longitudinal stiffeners are considered to be simply supported at the transverse stiffeners.

(4) It should be verified that using a second order elastic method analysis both the following criteria are satisfied at the ultimate limit state:

- that the maximum stress in the stiffener should not exceed $f_y/\gamma_{M1}$;
- that the additional deflection should not exceed b/300.

(5) In the absence of an axial force in the transverse stiffener both the criteria in (4) above may be assumed to be satisfied provided that the second moment of area $I_{st}$ of the transverse stiffeners is not less than:

$$I_{st} = \frac{\sigma_m}{E}\left(\frac{b}{\pi}\right)^4 \left(1 + w_0 \frac{300}{b} u\right) \tag{9.1}$$

where $\sigma_m = \dfrac{\sigma_{cr,c}}{\sigma_{cr,p}} \dfrac{N_{Ed}}{b}\left(\dfrac{1}{a_1} + \dfrac{1}{a_2}\right)$

$$u = \frac{\pi^2 \, E \, e_{\max}}{\dfrac{f_y \, 300 \, b}{\gamma_{M1}}} \geq 1{,}0$$

$e_{\max}$ is the maximum distance from the extreme fibre of the stiffener to the centroid of the stiffener;

$N_{Ed}$ is the maximum compressive force of the adjacent panels but not less than the maximum compressive stress times half the effective[p] compression area of the panel including stiffeners;

$\sigma_{cr,c}$ , $\sigma_{cr,p}$ are defined in 4.5.3 and Annex A.

**NOTE:** Where out of plane loading is applied to the transverse stiffeners reference should be made to EN 1993-2 and EN 1993-1-7.

(6) If the stiffener carries axial compression this should be increased by $\Delta N_{st} = \sigma_m b^2 / \pi^2$ in order to account for deviation forces. The criteria in (4) apply but $\Delta N_{st}$ need not be considered when calculating the uniform stresses from axial load in the stiffener.

(7) As a simplification the requirement of (4) may, in the absence of axial forces, be verified using a first order elastic analysis taking account of the following additional equivalent uniformly distributed lateral load $q$ acting on the length $b$:

$$q = \frac{\pi}{4}\sigma_m (w_0 + w_{el}) \tag{9.2}$$

where $\sigma_m$ is defined in (5) above;

$w_0$ is defined in Figure 9.2;

$w_{el}$ is the elastic deformation, that may be either determined iteratively or be taken as the maximum additional deflection $b$/300.

(8) Unless a more advanced method of analysis is carried out in order to prevent torsional buckling of stiffeners with open cross-sections, the following criterion should be satisfied:

$$\frac{I_T}{I_p} \geq 5{,}3 \frac{f_y}{E} \tag{9.3}$$

where $I_p$ is the polar second moment of area of the stiffener alone around the edge fixed to the plate;

$I_T$ is the St. Venant torsional constant for the stiffener alone.

Documento contenuto nel prodotto EUROCODICI edizione 2011. E' vietato l'uso in rete del singolo documento e la sua riproduzione. E' autorizzata la stampa per uso interno.



(9) Where warping stiffness is considered stiffeners should either fulfil (8) or the criterion

$$\sigma_{cr} \geq \theta f_y \tag{9.4}$$

where $\sigma_{cr}$ is the elastic critical stress for torsional buckling not considering rotational restraint from the plate;

$\theta$ is a parameter to ensure class 3 behaviour.

**NOTE:** The parameter $\theta$ may be given in the National Annex. The value $\theta = 6$ is recommended.

### 9.2.2 Minimum requirements for longitudinal stiffeners

(1) The requirements concerning torsional buckling in 9.2.1(8) and (9) also apply to longitudinal stiffeners.

(2) Discontinuous longitudinal stiffeners that do not pass through openings made in the transverse stiffeners or are not connected to either side of the transverse stiffeners should be:

- used only for webs (i.e. not allowed in flanges);
- neglected in global analysis;
- neglected in the calculation of stresses;
- considered in the calculation of the effective$^p$ widths of web sub-panels;
- considered in the calculation of the elastic critical stresses.

(3) Strength assessments for stiffeners should be performed according to 4.5.3 and 4.6.

### 9.2.3 Welded plates

(1) Plates with changes in plate thickness should be welded adjacent to the transverse stiffener, see Figure 9.3. The effects of eccentricity need not be taken into account unless the distance to the stiffener from the welded junction exceeds $b_0/2$ or 200 mm whichever is the smallest, where $b_0$ is the width of the plate between longitudinal stiffeners.

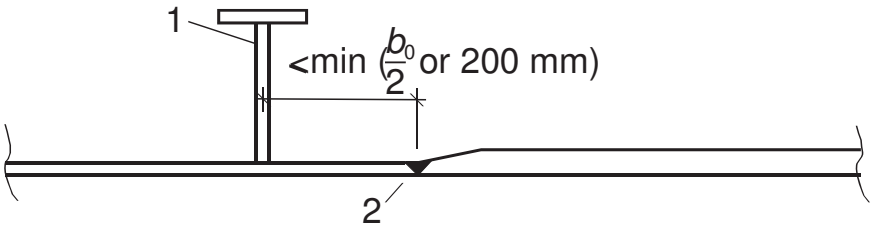


*1 Transverse stiffener*
*2 Transverse weld*

**Figure 9.3: Welded plates**

Documento contenuto nel prodotto EUROCODICI edizione 2011. E' vietato l'uso in rete del singolo documento e la sua riproduzione. E' autorizzata la stampa per uso interno.



### 9.2.4 Cut outs in stiffeners

(1) The dimensions of cut outs in longitudinal stiffeners should be as shown in Figure 9.4.

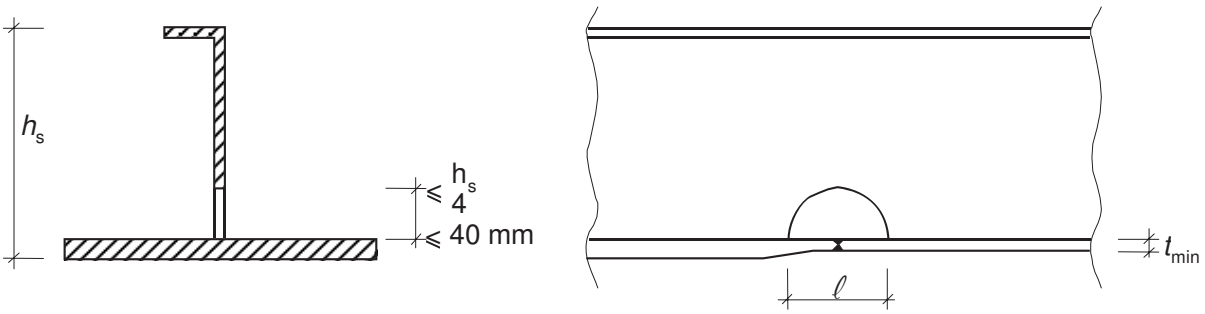


**Figure 9.4: Cut outs in longitudinal stiffeners**

(2) The length $\ell$ should not exceed:

$\ell \leq 6\, t_{min}$ for flat stiffeners in compression

$\ell \leq 8\, t_{min}$ for other stiffeners in compression

$\ell \leq 15\, t_{min}$ for stiffeners without compression

where $t_{min}$ is the lesser of the plate thicknesses

(3) The limiting values $\ell$ in (2) for stiffeners in compression may be increased by $\sqrt{\frac{\sigma_{x,Rd}}{\sigma_{x,Ed}}}$ when $\sigma_{x,Ed} \leq \sigma_{x,Rd}$ and $\ell \leq 15 t_{min}$.

$\sigma_{x,Ed}$ is the compression stress at the location of the cut-out

(4) The dimensions of cut outs in transverse stiffeners should be as shown in Figure 9.5.

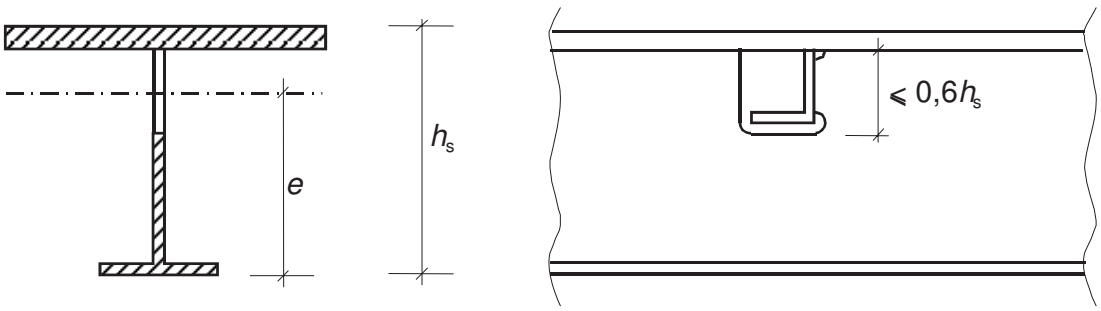


**Figure 9.5: Cut outs in transverse stiffeners**

(5) The gross web adjacent to the cut out should resist a shear force $V_{Ed}$, where

$$V_{Ed} = \frac{I_{net}}{e} \frac{f_{yk}}{\gamma_{M0}} \frac{\pi}{b_G} \tag{9.5}$$

$I_{net}$ is the second moment of area for the net section of the transverse stiffener;

$e$ is the maximum distance from the underside of the flange plate to the neutral axis of net section, see Figure 9.5;

$b_G$ is the length of the transverse stiffener between the flanges.

Documento contenuto nel prodotto EUROCODICI edizione 2011. E' vietato l'uso in rete del singolo documento e la sua riproduzione. E' autorizzata la stampa per uso interno.



## 9.3 Shear

### 9.3.1 Rigid end post

(1) The rigid end post (see Figure 5.1) should act as a bearing stiffener resisting the reaction from the support (see 9.4), and should be designed as a short beam resisting the longitudinal membrane stresses in the plane of the web.

**NOTE:** For the effects of eccentricity due to movements of bearings, see EN 1993-2.

(2) A rigid end post should comprise of two double-sided transverse stiffeners that form the flanges of a short beam of length $h_w$, see Figure 5.1 (b). The strip of web plate between the stiffeners forms the web of the short beam. Alternatively, a rigid end post may be in the form of a rolled section, connected to the end of the web plate as shown in Figure 9.6.

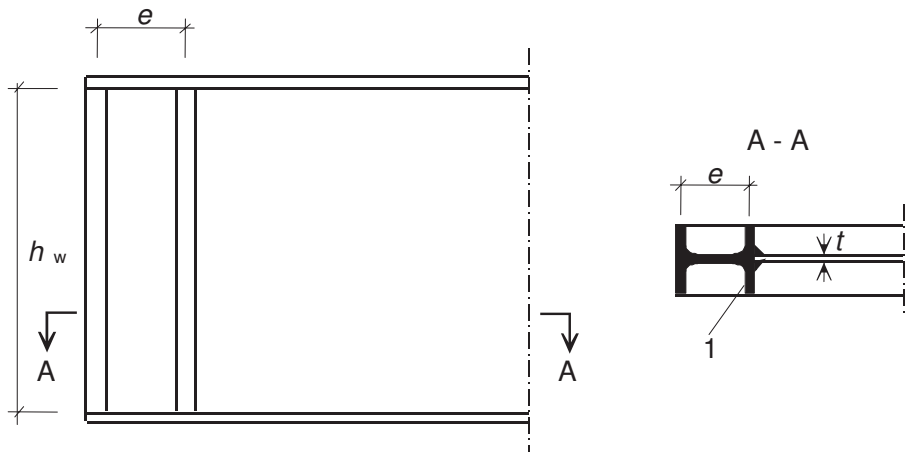


*1 Inserted section*

**Figure 9.6: Rolled section forming an end-post**

(3) Each double sided stiffener consisting of flats should have a cross sectional area of at least $4h_w t^2 / e$, where $e$ is the centre to centre distance between the stiffeners and $e > 0{,}1\, h_w$, see Figure 5.1 (b). Where a rolled section other than flats is used for the end-post its section modulus should be not less than $4h_w t^2$ for bending around a horizontal axis perpendicular to the web.

(4) As an alternative the girder end may be provided with a single double-sided stiffener and a vertical stiffener adjacent to the support so that the subpanel resists the maximum shear when designed with a non-rigid end post.

### 9.3.2 Stiffeners acting as non-rigid end post

(1) A non-rigid end post may be a single double sided stiffener as shown in Figure 5.1 (c). It may act as a bearing stiffener resisting the reaction at the girder support (see 9.4).

### 9.3.3 Intermediate transverse stiffeners

(1) Intermediate stiffeners that act as rigid supports to interior panels of the web should be designed for strength and stiffness.

(2) When flexible intermediate transverse stiffeners are used, their stiffness should be considered in the calculation of $k_\tau$ in 5.3(5).

Documento contenuto nel prodotto EUROCODICI edizione 2011. E' vietato l'uso in rete del singolo documento e la sua riproduzione. E' autorizzata la stampa per uso interno.



(3) The effective section of intermediate stiffeners acting as rigid supports for web panels should have a minimum second moment of area $I_{st}$:

$$\begin{aligned} &if\ a/h_w < \sqrt{2}: \quad I_{st} \geq 1{,}5\, h_w^3\, t^3 / a^2 \\ &if\ a/h_w \geq \sqrt{2}: \quad I_{st} \geq 0{,}75\, h_w\, t^3 \end{aligned} \tag{9.6}$$

**NOTE:** Intermediate rigid stiffeners may be designed for an axial force equal to $\left(V_{Ed} - \frac{1}{\bar{\lambda}_w^2} f_{yw} h_w t / \left(\sqrt{3}\ \gamma_{M1}\right)\right)$ according to 9.2.1(3). In the case of variable shear forces the check is performed for the shear force at the distance $0{,}5h_w$ from the edge of the panel with the largest shear force.

### 9.3.4 Longitudinal stiffeners

(1) If longitudinal stiffeners are taken into account in the stress analysis they should be checked for direct stresses for the cross sectional resistance.

### 9.3.5 Welds

(1) The web to flange welds may be designed for the nominal shear flow $V_{Ed} / h_w$ if $V_{Ed}$ does not exceed $\chi_w f_{yw} h_w t / \left(\sqrt{3}\ \gamma_{M1}\right)$. For larger values $V_{Ed}$ the weld between flanges and webs should be designed for the shear flow $\eta\ f_{yw} t / \left(\sqrt{3}\ \gamma_{M1}\right)$.

(2) In all other cases welds should be designed to transfer forces along and across welds making up sections taking into account analysis method (elastic/plastic) and second order effects.

## 9.4 Transverse loads

(1) If the design resistance of an unstiffened web is insufficient, transverse stiffeners should be provided.

(2) The out-of-plane buckling resistance of the transverse stiffener under transverse loads and shear force (see 9.3.3(3)) should be determined from 6.3.3 or 6.3.4 of EN 1993-1-1, using buckling curve *c*. When both ends are assumed to be fixed laterally a buckling length $\ell$ of not less than $0{,}75h_w$ should be used. A larger value of $\ell$ should be used for conditions that provide less end restraint. If the stiffeners have cut outs at the loaded end, the cross sectional resistance should be checked at this end.

(3) Where single sided or other asymmetric stiffeners are used, the resulting eccentricity should be allowed for using 6.3.3 or 6.3.4 of EN 1993-1-1. If the stiffeners are assumed to provide lateral restraint to the compression flange they should comply with the stiffness and strength criteria in the design for lateral torsional buckling.

Documento contenuto nel prodotto EUROCODICI edizione 2011. E' vietato l'uso in rete del singolo documento e la sua riproduzione. E' autorizzata la stampa per uso interno.



# 10 Reduced stress method

(1) The reduced stress method may be used to determine the stress limits for stiffened or unstiffened plates.

**NOTE 1:** This method is an alternative to the effective width method specified in section 4 to 7 in respect of the following:

- $\sigma_{x,Ed}$, $\sigma_{z,Ed}$ and $\tau_{Ed}$ are considered as acting together
- the stress limits of the weakest part of the cross section may govern the resistance of the full cross section.

**NOTE 2:** The stress limits may also be used to determine equivalent effective areas. The National Annex may give limits of application for the methods.

(2) For unstiffened or stiffened panels subjected to combined stresses $\sigma_{x,Ed}$ , $\sigma_{z,Ed}$ and $\tau_{Ed}$ class 3 section properties may be assumed, where

$$\frac{\rho\,\alpha_{ult,k}}{\gamma_{M1}} \geq 1 \tag{10.1}$$

where $\alpha_{ult,k}$ is the minimum load amplifier for the design loads to reach the characteristic value of resistance of the most critical point of the plate, see (4);

$\rho$ is the reduction factor depending on the plate slenderness $\bar{\lambda}_p$ to take account of plate buckling, see (5);

$\gamma_{M1}$ is the partial factor applied to this method.

(3) The plate slenderness $\bar{\lambda}_p$ should be taken from

$$\bar{\lambda}_p = \sqrt{\frac{\alpha_{ult,k}}{\alpha_{cr}}} \tag{10.2}$$

where $\alpha_{cr}$ is the minimum load amplifier for the design loads to reach the elastic critical load of the plate under the complete stress field, see (6)

**NOTE 1:** For calculating $\alpha_{cr}$ for the complete stress field, the stiffened plate may be modelled using the rules in section 4 and 5 without reduction of the second moment of area of longitudinal stiffeners as specified in 5.3(4).

**NOTE 2:** When $\alpha_{cr}$ cannot be determined for the panel and its subpanels as a whole, separate checks for the subpanel and the full panel may be applied.

(4) In determining $\alpha_{ult,k}$ the yield criterion may be used for resistance:

$$\frac{1}{\alpha_{ult,k}^2} = \left(\frac{\sigma_{x,Ed}}{f_y}\right)^2 + \left(\frac{\sigma_{z,Ed}}{f_y}\right)^2 - \left(\frac{\sigma_{x,Ed}}{f_y}\right)\left(\frac{\sigma_{z,Ed}}{f_y}\right) + 3\left(\frac{\tau_{Ed}}{f_y}\right)^2 \tag{10.3}$$

where $\sigma_{x,Ed}$, $\sigma_{z,Ed}$ and $\tau_{Ed}$ are the components of the stress field in the ultimate limit state.

**NOTE:** By using the equation (10.3) it is assumed that the resistance is reached when yielding occurs without plate buckling.

(5) The reduction factor ρ may be determined using either of the following methods:

a) the minimum value of the following reduction factors:

$\rho_x$ for longitudinal stresses from 4.5.4(1) taking into account column-like behaviour where relevant;

$\rho_z$ for transverse stresses from 4.5.4(1) taking into account column-like behaviour where relevant;

$\chi_w$ for shear stresses from 5.2(1);

Documento contenuto nel prodotto EUROCODICI edizione 2011. E' vietato l'uso in rete del singolo documento e la sua riproduzione. E' autorizzata la stampa per uso interno.



each calculated for the slenderness $\bar{\lambda}_p$ according to equation (10.2).

**NOTE:** This method leads to the verification formula:

$$\left(\frac{\sigma_{x,Ed}}{f_y/\gamma_{M1}}\right)^2+\left(\frac{\sigma_{z,Ed}}{f_y/\gamma_{M1}}\right)^2-\left(\frac{\sigma_{x,Ed}}{f_y/\gamma_{M1}}\right)\left(\frac{\sigma_{z,Ed}}{f_y/\gamma_{M1}}\right)+3\left(\frac{\tau_{Ed}}{f_y/\gamma_{M1}}\right)^2\leq\rho^2 \tag{10.4}$$

**NOTE:** For determining $\rho_z$ for transverse stresses the rules in section 4 for direct stresses $\sigma_x$ should be applied to $\sigma_z$ in the z-direction. For consistency section 6 should not be applied.

b) a value interpolated between the values of $\rho_x$, $\rho_z$ and $\chi_w$ as determined in a) by using the formula for $\alpha_{ult,k}$ as interpolation function

**NOTE:** This method leads to the verification format:

$$\left(\frac{\sigma_{x,Ed}}{\rho_x f_y/\gamma_{M1}}\right)^2+\left(\frac{\sigma_{z,Ed}}{\rho_z f_y/\gamma_{M1}}\right)^2-\left(\frac{\sigma_{x,Ed}}{\rho_x f_y/\gamma_{M1}}\right)\left(\frac{\sigma_{z,Ed}}{\rho_z f_y/\gamma_{M1}}\right)+3\left(\frac{\tau_{Ed}}{\chi_w f_y/\gamma_{M1}}\right)^2\leq 1 \tag{10.5}$$

**NOTE 1:** Since verification formulae (10.3), (10.4) and (10.5) include an interaction between shear force, bending moment, axial force and transverse force, section 7 should not be applied.

**NOTE 2:** The National Annex may give further information on the use of equations (10.4) and (10.5). In case of panels with tension and compression it is recommended to apply equations (10.4) and (10.5) only for the compressive parts.

(6) Where $\alpha_{cr}$ values for the complete stress field are not available and only $\alpha_{cr,i}$ values for the various components of the stress field $\sigma_{x,Ed}$ , $\sigma_{z,Ed}$ and $\tau_{Ed}$ can be used, the $\alpha_{cr}$ value may be determined from:

$$\frac{1}{\alpha_{cr}}=\frac{1+\psi_x}{4\,\alpha_{cr,x}}+\frac{1+\psi_z}{4\,\alpha_{cr,z}}+\left[\left(\frac{1+\psi_x}{4\,\alpha_{cr,x}}+\frac{1+\psi_z}{4\,\alpha_{cr,z}}\right)^2+\frac{1-\psi_x}{2\,\alpha_{cr,x}^2}+\frac{1-\psi_z}{2\,\alpha_{cr,z}^2}+\frac{1}{\alpha_{cr,\tau}^2}\right]^{1/2} \tag{10.6}$$

where $\alpha_{cr,x}=\dfrac{\sigma_{cr,x}}{\sigma_{x,Ed}}$

$\alpha_{cr,z}=\dfrac{\sigma_{cr,z}}{\sigma_{z,Ed}}$

$\alpha_{cr,\tau}=\dfrac{\tau_{cr,\tau}}{\tau_{\tau,Ed}}$

and $\sigma_{cr,x}$, $\sigma_{cr,z}$, $\tau_{cr}$, $\psi_x$ and $\psi_z$ are determined from sections 4 to 6.

(7) Stiffeners and detailing of plate panels should be designed according to section 9.

Documento contenuto nel prodotto EUROCODICI edizione 2011. E' vietato l'uso in rete del singolo documento e la sua riproduzione. E' autorizzata la stampa per uso interno.



# Annex A [informative] – Calculation of critical stresses for stiffened plates

## A.1 Equivalent orthotropic plate

(1) Plates with at least three longitudinal stiffeners may be treated as equivalent orthotropic plates.

(2) The elastic critical plate buckling stress of the equivalent orthotropic plate may be taken as:

$$\sigma_{cr,p} = k_{\sigma,p}\ \sigma_E \tag{A.1}$$

where $\sigma_E = \dfrac{\pi^2\ E\ t^2}{12\left(1-\nu^2\right)b^2} = 190000\left(\dfrac{t}{b}\right)^2 \qquad in\ [MPa]$

$k_{\sigma,p}$ is the buckling coefficient according to orthotropic plate theory with the stiffeners smeared over the plate;

$b$ is defined in Figure A.1;

$t$ is the thickness of the plate.

**NOTE 1:** The buckling coefficient $k_{\sigma,p}$ is obtained either from appropriate charts for smeared stiffeners or relevant computer simulations; alternatively charts for discretely located stiffeners may be used provided local buckling in the subpanels can be ignored and treated separately.

**NOTE 2:** $\sigma_{cr,p}$ is the elastic critical plate buckling stress at the edge of the panel where the maximum compression stress occurs, see Figure A.1.

**NOTE 3:** Where a web is of concern, the width b in equations (A.1) and (A.2) should be replaced by $h_w$.

**NOTE 4:** For stiffened plates with at least three equally spaced longitudinal stiffeners the plate buckling coefficient $k_{\sigma,p}$ (global buckling of the stiffened panel) may be approximated by:

$$k_{\sigma,p} = \frac{2\left(\left(1+\alpha^2\right)^2 + \gamma - 1\right)}{\alpha^2(\psi+1)(1+\delta)} \quad if \quad \alpha \le \sqrt[4]{\gamma}$$
$$k_{\sigma,p} = \frac{4\left(1+\sqrt{\gamma}\right)}{(\psi+1)(1+\delta)} \quad if \quad \alpha > \sqrt[4]{\gamma} \tag{A.2}$$

with: $\psi = \dfrac{\sigma_2}{\sigma_1} \ge 0{,}5$

$$\gamma = \frac{I_{sl}}{I_p}$$

$$\delta = \frac{\Sigma A_{sl}}{A_p}$$

$$\alpha = \frac{a}{b} \ge 0{,}5$$

where: $I_{sl}$ is the second moment of area of the whole stiffened plate;

$I_p$ is the second moment of area for bending of the plate $= \dfrac{bt^3}{12\left(1-\upsilon^2\right)} = \dfrac{bt^3}{10{,}92}$;

$\Sigma A_{sl}$ is the sum of the gross areas of the individual longitudinal stiffeners;

$A_p$ is the gross area of the plate $= bt$;

$\sigma_1$ is the larger edge stress;

$\sigma_2$ is the smaller edge stress;

Documento contenuto nel prodotto EUROCODICI edizione 2011. E' vietato l'uso in rete del singolo documento e la sua riproduzione. E' autorizzata la stampa per uso interno.



$a$ , $b$ and $t$ are as defined in Figure A.1.

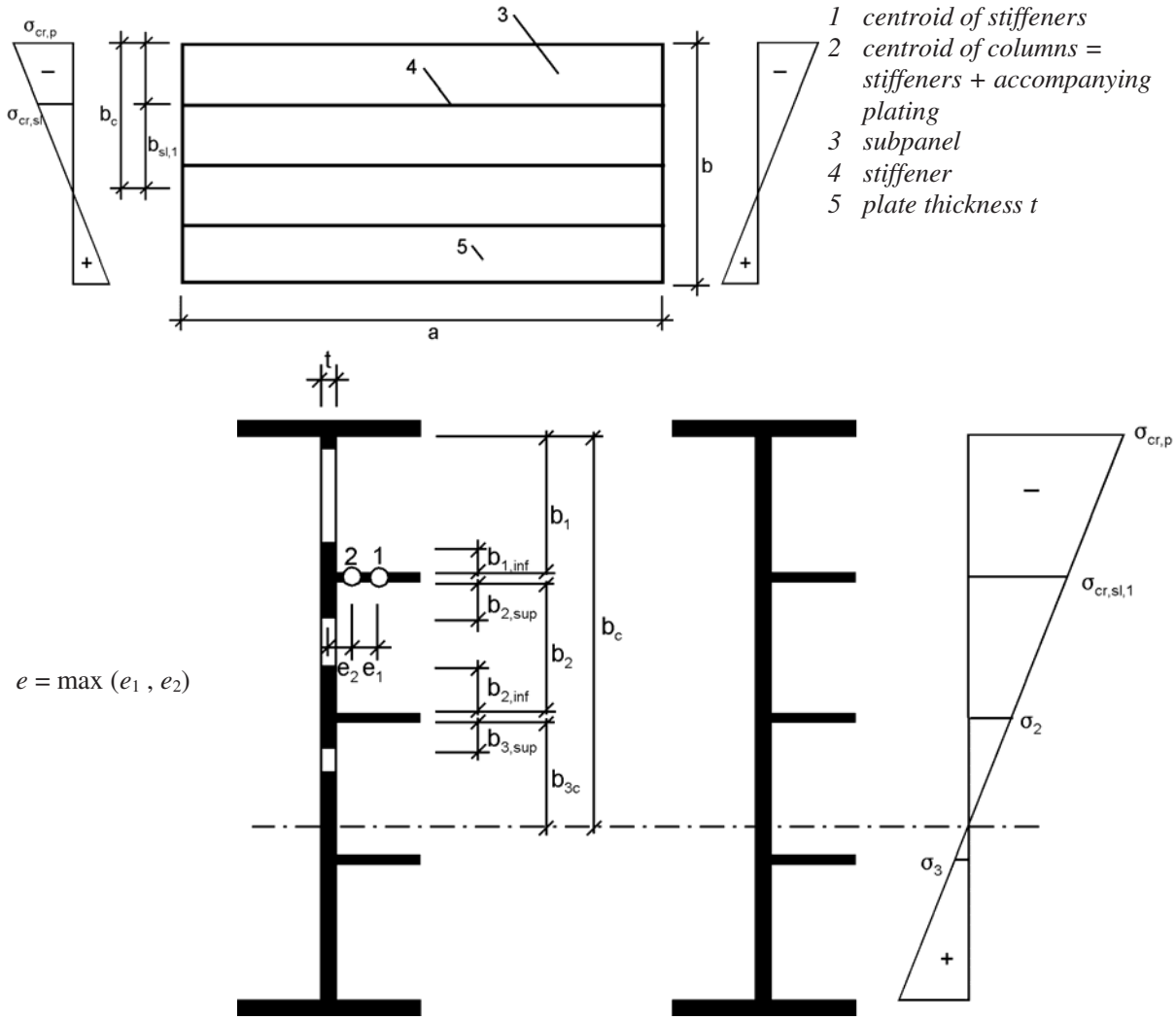


$e = \max(e_1, e_2)$

| | width for gross area | width for effective area according to Table 4.1 | condition for $\psi_i$ |
|---|---|---|---|
| $b_{1,\inf}$ | $\frac{3-\psi_1}{5-\psi_1} b_1$ | $\frac{3-\psi_1}{5-\psi_1} b_{1,eff}$ | $\psi_1 = \frac{\sigma_{cr,sl,1}}{\sigma_{cr,p}} > 0$ |
| $b_{2,\sup}$ | $\frac{2}{5-\psi_2} b_2$ | $\frac{2}{5-\psi_2} b_{2,eff}$ | $\psi_2 = \frac{\sigma_2}{\sigma_{cr,sl,1}} > 0$ |
| $b_{2,\inf}$ | $\frac{3-\psi_2}{5-\psi_2} b_2$ | $\frac{3-\psi_2}{5-\psi_2} b_{2,eff}$ | $\psi_2 > 0$ |
| $b_{3,\sup}$ | $0{,}4\ b_{3c}$ | $0{,}4\ b_{3c,\mathrm{eff}}$ | $\psi_3 = \frac{\sigma_3}{\sigma_2} < 0$ |

**Figure A.1: Notations for longitudinally stiffened plates**

Documento contenuto nel prodotto EUROCODICI edizione 2011. E' vietato l'uso in rete del singolo documento e la sua riproduzione. E' autorizzata la stampa per uso interno.



## A.2 Critical plate buckling stress for plates with one or two stiffeners in the compression zone

### A.2.1 General procedure

(1) If the stiffened plate has only one longitudinal stiffener in the compression zone the procedure in A.1 may be simplified by a fictitious isolated strut supported on an elastic foundation reflecting the plate effect in the direction perpendicular to this strut. The elastic critical stress of the strut may be obtained from A.2.2.

(2) For calculation of $A_{s\ell,1}$ and $I_{s\ell,1}$ the gross cross-section of the column should be taken as the gross area of the stiffener and adjacent parts of the plate described as follows. If the subpanel is fully in compression, a portion $(3-\psi)/(5-\psi)$ of its width $b_1$ should be taken at the edge of the panel and $2/(5-\psi)$ at the edge with the highest stress. If the stress changes from compression to tension within the subpanel, a portion 0,4 of the width $b_c$ of the compressed part of this subpanel should be taken as part of the column, see Figure A.2 and also Table 4.1. $\psi$ is the stress ratio relative to the subpanel in consideration.

(3) The effective[p] cross-sectional area $A_{s\ell,eff}$ of the column should be taken as the effective[p] cross-section of the stiffener and the adjacent effective[p] parts of the plate, see Figure A.1. The slenderness of the plate elements in the column may be determined according to 4.4(4), with $\sigma_{com,Ed}$ calculated for the gross cross-section of the plate.

(4) If $\rho_c f_y/\gamma_{M1}$, with $\rho_c$ determined according to 4.5.4(1), is greater than the average stress in the column $\sigma_{com,Ed}$ no further reduction of the effective[p] area of the column should be made. Otherwise the effective area in (4.6) should be modified as follows:

$$A_{c,eff,loc} = \frac{\rho_c \; f_y \; A_{sl,1}}{\sigma_{com,Ed} \; \gamma_{M1}} \tag{A.3}$$

(5) The reduction mentioned in A.2.1(4) should be applied only to the area of the column. No reduction need be applied to other compressed parts of the plate, except for checking buckling of subpanels.

(6) As an alternative to using an effective[p] area according to A.2.1(4), the resistance of the column may be determined from A.2.1(5) to (7) and checked to ensure that it exceeds the average stress $\sigma_{com,Ed}$.

**NOTE:** The method outlined in (6) may be used in the case of multiple stiffeners in which the restraining effect from the plate is neglected, that is the fictitious column is considered free to buckle out of the plane of the web.

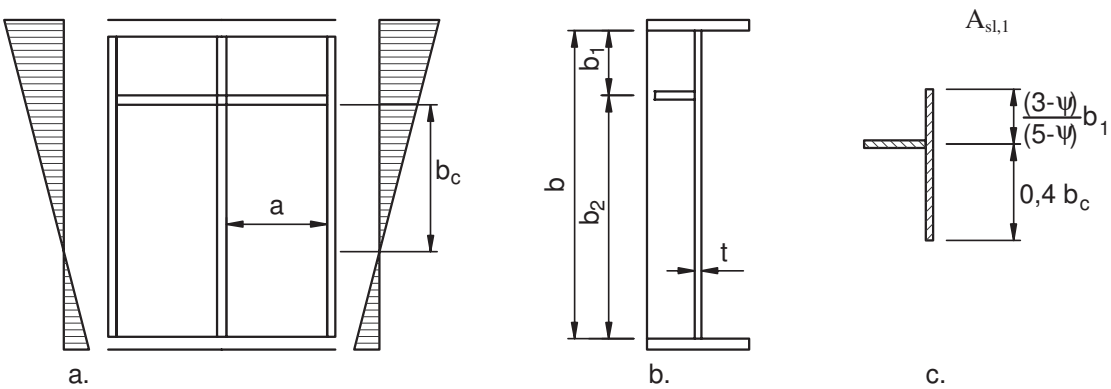


**Figure A.2: Notations for a web plate with single stiffener in the compression zone**

(7) If the stiffened plate has two longitudinal stiffeners in the compression zone, the one stiffener procedure described in A.2.1(1) may be applied, see Figure A.3. First, it is assumed that one of the stiffeners

Documento contenuto nel prodotto EUROCODICI edizione 2011. E' vietato l'uso in rete del singolo documento e la sua riproduzione. E' autorizzata la stampa per uso interno.



buckles while the other one acts as a rigid support. Buckling of both the stiffeners simultaneously is accounted for by considering a single lumped stiffener that is substituted for both individual ones such that:

a) its cross-sectional area and its second moment of area $I_{sl}$ are respectively the sum of that for the individual stiffeners

b) it is positioned at the location of the resultant of the respective forces in the individual stiffeners

For each of these situations illustrated in Figure A.3 a relevant value of $\sigma_{cr.p}$ is computed, see A.2.2(1), with $b_1 = b_1^*$ and $b_2 = b_2^*$ and $B^* = b_1^* + b_2^*$, see Figure A.3.

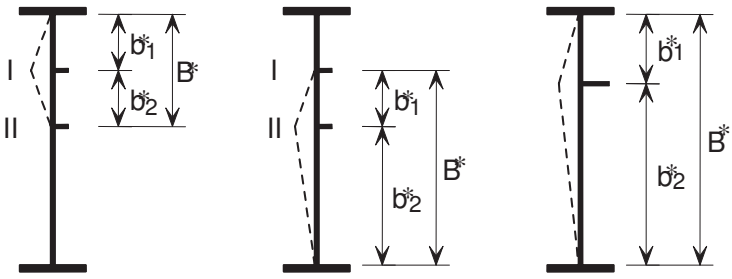


Stiffener I | Stiffener II | Lumped stiffener

| | | | |
|---|---|---|---|
| Cross-sectional area | $A_{s\ell,I}$ | $A_{s\ell,II}$ | $A_{s\ell,I} + A_{s\ell,II}$ |
| Second moment of area | $I_{s\ell,I}$ | $I_{s\ell,II}$ | $I_{s\ell,I} + I_{s\ell,II}$ |

**Figure A.3: Notations for plate with two stiffeners in the compression zone**

### A.2.2 Simplified model using a column restrained by the plate

(1) In the case of a stiffened plate with one longitudinal stiffener located in the compression zone, the elastic critical buckling stress of the stiffener can be calculated as follows ignoring stiffeners in the tension zone:

$$\sigma_{cr,s\ell} = \frac{1{,}05\,E}{A_{s\ell,1}} \frac{\sqrt{I_{s\ell,1}\,t^3\,b}}{b_1\,b_2} \qquad if\ a \geq a_c$$

$$\sigma_{cr,s\ell} = \frac{\pi^2\,E\,I_{s\ell,1}}{A_{s\ell,1}\,a^2} + \frac{E\,t^3\,b\,a^2}{4\,\pi^2\left(1-\nu^2\right)A_{s\ell,1}\,b_1^2\,b_2^2} \qquad if\ a \leq a_c \tag{A.4}$$

with $a_c = 4{,}33\sqrt[4]{\dfrac{I_{s\ell,1}\,b_1^2\,b_2^2}{t^3\,b}}$

where $A_{s\ell,1}$ is the gross area of the column obtained from A.2.1(2)

$I_{s\ell,1}$ is the second moment of area of the gross cross-section of the column defined in A.2.1(2) about an axis through its centroid and parallel to the plane of the plate;

$b_1$, $b_2$ are the distances from the longitudinal edges of the web to the stiffener ($b_1+b_2 = b$).

**NOTE:** For determining $\sigma_{cr,c}$ see NOTE to 4.5.3(3).

(2) In the case of a stiffened plate with two longitudinal stiffeners located in the compression zone the elastic critical plate buckling stress should be taken as the lowest of those computed for the three cases using

Documento contenuto nel prodotto EUROCODICI edizione 2011. E' vietato l'uso in rete del singolo documento e la sua riproduzione. E' autorizzata la stampa per uso interno.



equation (A.4) with $b_1 = b_1^*$, $b_2 = b_2^*$ and $b = B^*$. The stiffeners in the tension zone should be ignored in the calculation.

## A.3 Shear buckling coefficients

(1) For plates with rigid transverse stiffeners and without longitudinal stiffeners or with more than two longitudinal stiffeners, the shear buckling coefficient $k_\tau$ can be obtained as follows:

$$k_\tau = 5{,}34 + 4{,}00\,(h_w / a)^2 + k_{\tau s\ell} \quad \textit{when } a / h_w \geq 1$$
$$k_\tau = 4{,}00 + 5{,}34\,(h_w / a)^2 + k_{\tau s\ell} \quad \textit{when } a / h_w < 1 \qquad \text{(A.5)}$$

where $k_{\tau s\ell} = 9\left(\dfrac{h_w}{a}\right)^2 \sqrt[4]{\left(\dfrac{I_{s\ell}}{t^3\, h_w}\right)^3}$ *but not less than* $\dfrac{2{,}1}{t}\sqrt[3]{\dfrac{I_{s\ell}}{h_w}}$

$a$ is the distance between transverse stiffeners (see Figure 5.3);

$I_{s\ell}$ is the second moment of area of the longitudinal stiffener about the z–z axis, see Figure 5.3 (b). For webs with two or more longitudinal stiffeners, not necessarily equally spaced, $I_{s\ell}$ is the sum of the stiffness of the individual stiffeners.

**NOTE:** No intermediate non-rigid transverse stiffeners are allowed for in equation (A.5).

(2) The equation (A.5) also applies to plates with one or two longitudinal stiffeners, if the aspect ratio $\alpha = \dfrac{a}{h_w}$ satisfies $\alpha \geq 3$. For plates with one or two longitudinal stiffeners and an aspect ratio $\alpha < 3$ the shear buckling coefficient should be taken from:

$$k_\tau = 4{,}1 + \frac{6{,}3 + 0{,}18\dfrac{I_{s\ell}}{t^3 h_w}}{\alpha^2} + 2{,}2\sqrt[3]{\frac{I_{s\ell}}{t^3 h_w}} \qquad \text{(A.6)}$$

Documento contenuto nel prodotto EUROCODICI edizione 2011. E' vietato l'uso in rete del singolo documento e la sua riproduzione. E' autorizzata la stampa per uso interno.



# Annex B [informative] – Non-uniform members

## B.1 General

(1) The rules in section 10 are applicable to webs of members with non parallel flanges as in haunched beams and to webs with regular or irregular openings and non orthogonal stiffeners.

(2) $\alpha_{ult}$ and $\alpha_{crit}$ may be obtained from FE-methods, see Annex C.

(3) The reduction factors $\rho_x$ , $\rho_z$ and $\chi_w$ for $\bar{\lambda}_p$ may be obtained from the appropriate plate buckling curves, see sections 4 and 5.

**NOTE:** The reduction factor ρ may be obtained as follows:

$$\rho = \frac{1}{\phi_p + \sqrt{\phi_p^2 - \bar{\lambda}_p}} \tag{B.1}$$

where $\phi_p = \frac{1}{2}\left(1 + \alpha_p\left(\bar{\lambda}_p - \bar{\lambda}_{p0}\right) + \bar{\lambda}_p\right)$

and $\bar{\lambda}_p = \sqrt{\frac{\alpha_{ult,k}}{\alpha_{cr}}}$

This procedure applies to $\rho_x$, $\rho_z$ and $\chi_w$. The values of $\bar{\lambda}_{p0}$ and $\alpha_p$ are given in Table B.1. These values have been calibrated against the plate buckling curves in sections 4 and 5 and give a direct correlation to the equivalent geometric imperfection, by :

$$e_0 = \alpha_p \left(\bar{\lambda}_p - \bar{\lambda}_{p0}\right)\frac{t}{6}\frac{1 - \frac{\rho\bar{\lambda}_p}{\gamma_{M1}}}{1 - \rho\bar{\lambda}_p} \tag{B.2}$$

**Table B.1: Values for $\bar{\lambda}_{p0}$ and $\alpha_p$**

| Product | predominant buckling mode | $\alpha_p$ | $\bar{\lambda}_{p0}$ |
|---|---|---|---|
| hot rolled | direct stress for $\psi \geq 0$ | 0,13 | 0,70 |
| | direct stress for $\psi < 0$<br>shear<br>transverse stress | | 0,80 |
| welded or cold formed | direct stress for $\psi \geq 0$ | 0,34 | 0,70 |
| | direct stress for $\psi < 0$<br>shear<br>transverse stress | | 0,80 |

Documento contenuto nel prodotto EUROCODICI edizione 2011. E' vietato l'uso in rete del singolo documento e la sua riproduzione. E' autorizzata la stampa per uso interno.



## B.2 Interaction of plate buckling and lateral torsional buckling

(1) The method given in B.1 may be extended to the verification of combined plate buckling and lateral torsional buckling of members by calculating $\alpha_{ult}$ and $\alpha_{crit}$ as follows:

$\alpha_{ult}$ is the minimum load amplifier for the design loads to reach the characteristic value of resistance of the most critical cross section, neglecting any plate buckling and lateral torsional buckling;

$\alpha_{cr}$ is the minimum load amplifier for the design loads to reach the elastic critical resistance of the member including plate buckling and lateral torsional buckling modes.

(2) When $\alpha_{cr}$ contains lateral torsional buckling modes, the reduction factor $\rho$ used should be the minimum of the reduction factor according to B.1(3) and the $\chi_{LT}$ – value for lateral torsional buckling according to 6.3.3 of EN 1993-1-1.

Documento contenuto nel prodotto EUROCODICI edizione 2011. E' vietato l'uso in rete del singolo documento e la sua riproduzione. E' autorizzata la stampa per uso interno.



# Annex C [informative] – Finite Element Methods of analysis (FEM)

## C.1 General

(1) Annex C gives guidance on the use of FE-methods for ultimate limit state, serviceability limit state or fatigue verifications of plated structures.

**NOTE 1:** For FE-calculation of shell structures see EN 1993-1-6.

**NOTE 2:** This guidance is intended for engineers who are experienced in the use of Finite Element methods.

(2) The choice of the FE-method depends on the problem to be analysed and based on the following assumptions:

**Table C.1: Assumptions for FE-methods**

| No | Material behaviour | Geometric behaviour | Imperfections, see section C.5 | Example of use |
|---|---|---|---|---|
| 1 | linear | linear | no | elastic shear lag effect, elastic resistance |
| 2 | non linear | linear | no | plastic resistance in ULS |
| 3 | linear | non linear | no | critical plate buckling load |
| 4 | linear | non linear | yes | elastic plate buckling resistance |
| 5 | non linear | non linear | yes | elastic-plastic resistance in ULS |

## C.2 Use

(1) In using FEM for design special care should be taken to

- the modelling of the structural component and its boundary conditions;
- the choice of software and documentation;
- the use of imperfections;
- the modelling of material properties;
- the modelling of loads;
- the modelling of limit state criteria;
- the partial factors to be applied.

**NOTE:** The National Annex may define the conditions for the use of FEM analysis in design.

## C.3 Modelling

(1) The choice of FE-models (shell models or volume models) and the size of mesh determine the accuracy of results. For validation sensitivity checks with successive refinement may be carried out.

(2) The FE-modelling may be carried out either for:

- the component as a whole or
- a substructure as a part of the whole structure.

**NOTE:** An example for a component could be the web and/or the bottom plate of continuous box girders in the region of an intermediate support where the bottom plate is in compression. An example for a substructure could be a subpanel of a bottom plate subject to biaxial stresses.

(3) The boundary conditions for supports, interfaces and applied loads should be chosen such that results obtained are conservative.

Documento contenuto nel prodotto EUROCODICI edizione 2011. E' vietato l'uso in rete del singolo documento e la sua riproduzione. E' autorizzata la stampa per uso interno.



(4) Geometric properties should be taken as nominal.

(5) All imperfections should be based on the shapes and amplitudes as given in section C.5.

(6) Material properties should conform to C.6(2).

## C.4 Choice of software and documentation

(1) The software should be suitable for the task and be proven reliable.

**NOTE:** Reliability can be proven by appropriate bench mark tests.

(2) The mesh size, loading, boundary conditions and other input data as well as the output should be documented in a way that they can be reproduced by third parties.

## C.5 Use of imperfections

(1) Where imperfections need to be included in the FE-model these imperfections should include both geometric and structural imperfections.

(2) Unless a more refined analysis of the geometric imperfections and the structural imperfections is carried out, equivalent geometric imperfections may be used.

**NOTE 1:** Geometric imperfections may be based on the shape of the critical plate buckling modes with amplitudes given in the National Annex. 80 % of the geometric fabrication tolerances is recommended.

**NOTE 2:** Structural imperfections in terms of residual stresses may be represented by a stress pattern from the fabrication process with amplitudes equivalent to the mean (expected) values.

(3) The direction of the applied imperfection should be such that the lowest resistance is obtained.

(4) For applying equivalent geometric imperfections Table C.2 and Figure C.1 may be used.

**Table C.2: Equivalent geometric imperfections**

| Type of imperfection | Component | Shape | Magnitude |
|---|---|---|---|
| global | member with length $\ell$ | bow | see EN 1993-1-1, Table 5.1 |
| global | longitudinal stiffener with length $a$ | bow | min ($a$/400, $b$/400) |
| local | panel or subpanel with short span $a$ or $b$ | buckling shape | min ($a$/200, $b$/200) |
| local | stiffener or flange subject to twist | bow twist | 1 / 50 |

Documento contenuto nel prodotto EUROCODICI edizione 2011. E' vietato l'uso in rete del singolo documento e la sua riproduzione. E' autorizzata la stampa per uso interno.



| Type of imperfection | Component |
|---|---|
| global member with length $\ell$ | 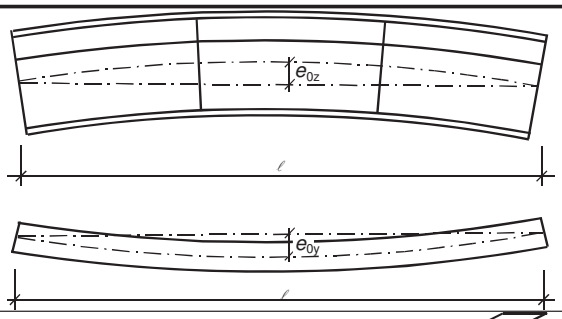  |
| global longitudinal stiffener with length $a$ | 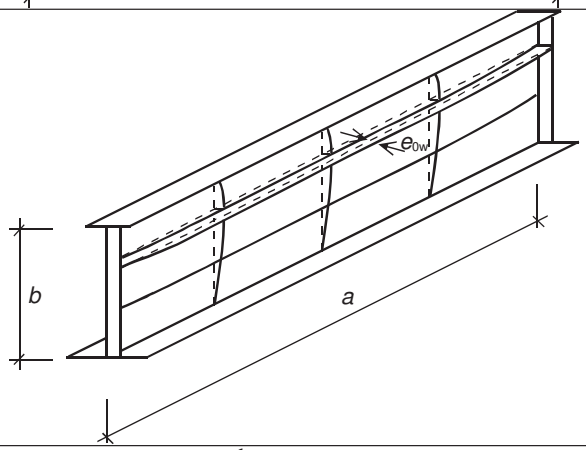  |
| local panel or subpanel | 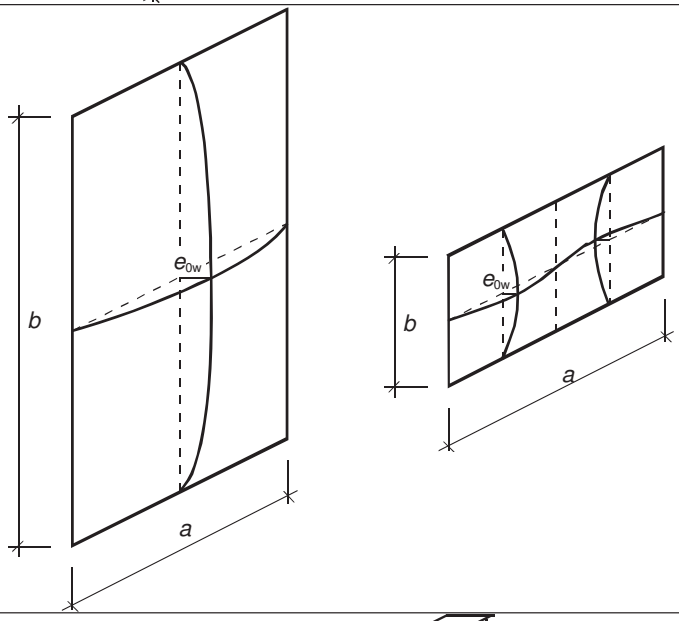  |
| local stiffener or flange subject to twist | 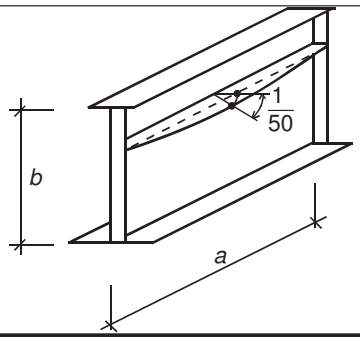  |

**Figure C.1: Modelling of equivalent geometric imperfections**

Documento contenuto nel prodotto EUROCODICI edizione 2011. E' vietato l'uso in rete del singolo documento e la sua riproduzione. E' autorizzata la stampa per uso interno.



(5) In combining imperfections a leading imperfection should be chosen and the accompanying imperfections may have their values reduced to 70%.

**NOTE 1:** Any type of imperfection should be taken as the leading imperfection and the others may be taken as the accompanying imperfections.

**NOTE 2:** Equivalent geometric imperfections may be substituted by the appropriate fictitious forces acting on the member.

## C.6 Material properties

(1) Material properties should be taken as characteristic values.

(2) Depending on the accuracy and the allowable strain required for the analysis the following assumptions for the material behaviour may be used, see Figure C.2:

a) elastic-plastic without strain hardening;

b) elastic-plastic with a nominal plateau slope;

c) elastic-plastic with linear strain hardening;

d) true stress-strain curve modified from the test results as follows:

$$\sigma_{true} = \sigma\left(1+\varepsilon\right)$$
$$\varepsilon_{true} = \ell n\left(1+\varepsilon\right) \qquad \text{(C.1)}$$

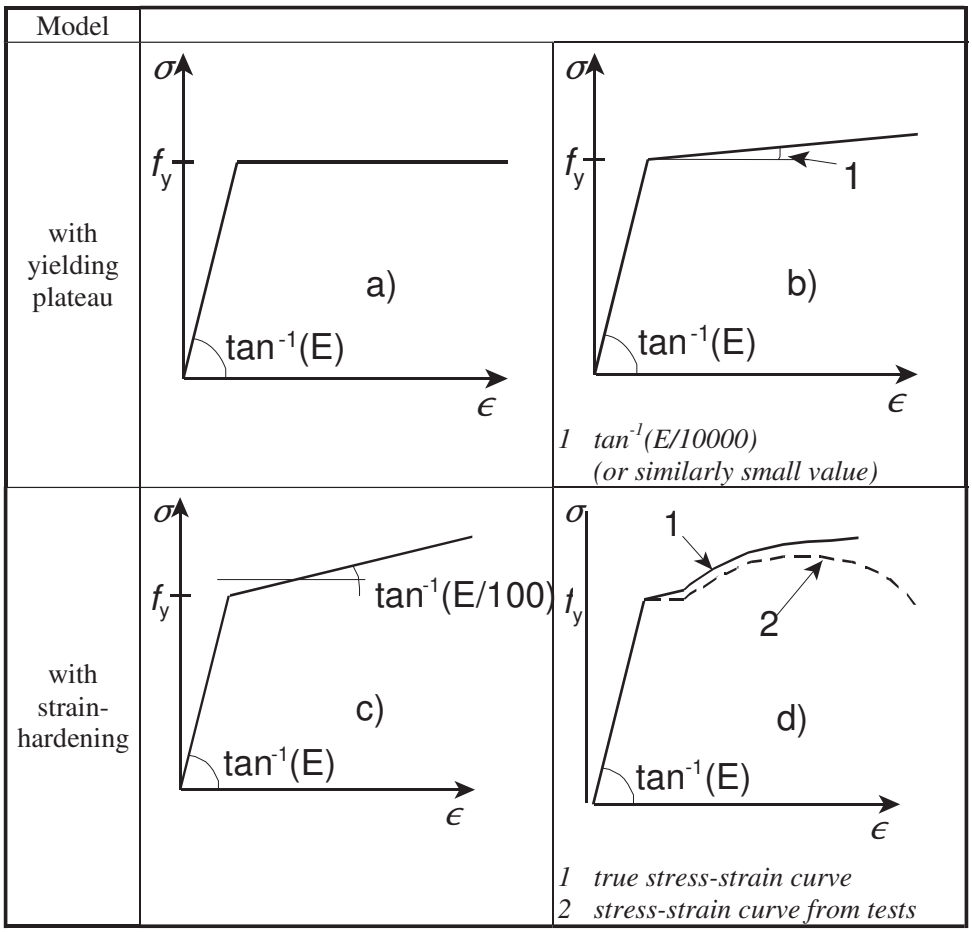


**Figure C.2: Modelling of material behaviour**

Documento contenuto nel prodotto EUROCODICI edizione 2011. E' vietato l'uso in rete del singolo documento e la sua riproduzione. E' autorizzata la stampa per uso interno.



**NOTE:** For the elastic modulus E the nominal value is relevant.

## C.7 Loads

(1) The loads applied to the structures should include relevant load factors and load combination factors. For simplicity a single load multiplier $\alpha$ may be used.

## C.8 Limit state criteria

(1) The ultimate limit state criteria should be used as follows:

1. for structures susceptible to buckling:

   attainment of the maximum load.

2. for regions subjected to tensile stresses:

   attainment of a limiting value of the principal membrane strain.

**NOTE 1:** The National Annex may specify the limiting of principal strain. A value of 5% is recommended.

**NOTE 2:** Other criteria may be used, e.g. attainment of the yielding criterion or limitation of the yielding zone.

## C.9 Partial factors

(1) The load magnification factor $\alpha_u$ to the ultimate limit state should be sufficient to achieve the required reliability.

(2) The magnification factor $\alpha_u$ should consist of two factors as follows:

1. $\alpha_1$ to cover the model uncertainty of the FE-modelling used. It should be obtained from evaluations of test calibrations, see Annex D to EN 1990;
2. $\alpha_2$ to cover the scatter of the loading and resistance models. It may be taken as $\gamma_{M1}$ if instability governs and $\gamma_{M2}$ if fracture governs.

(3) It should be verified that:

$$\alpha_u > \alpha_1 \alpha_2 \qquad \text{(C.2)}$$

**NOTE:** The National Annex may give information on $\gamma_{M1}$ and $\gamma_{M2}$. The use of $\gamma_{M1}$ and $\gamma_{M2}$ as specified in the relevant parts of EN 1993 is recommended.

Documento contenuto nel prodotto EUROCODICI edizione 2011. E' vietato l'uso in rete del singolo documento e la sua riproduzione. E' autorizzata la stampa per uso interno.



# Annex D [informative] – Plate girders with corrugated webs

## D.1 General

(1) Annex D covers design rules for I-girders with trapezoidal or sinusoidal corrugated webs, see Figure D.1.

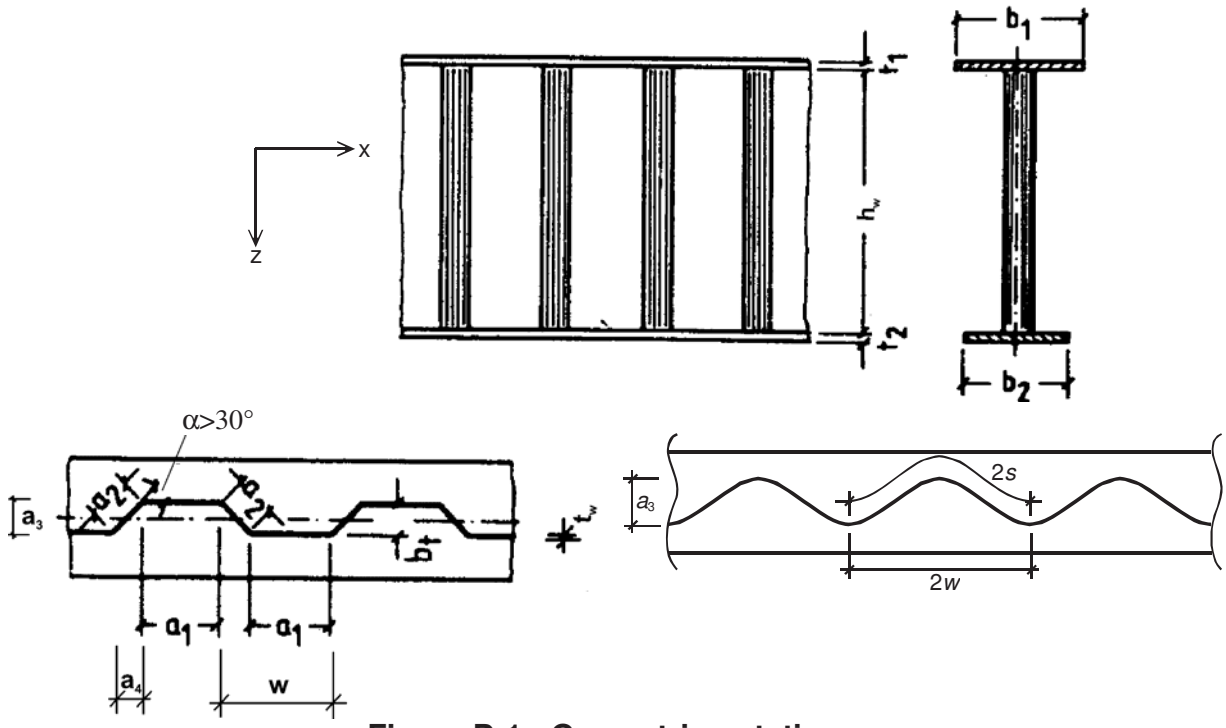


**Figure D.1: Geometric notations**

## D.2 Ultimate limit state

### D.2.1 Moment of resistance

(1) The moment of resistance $M_{Rd}$ due to bending should be taken as the minimum of the following:

$$M_{Rd} = \min\left\{ \underbrace{\frac{b_2 t_2 f_{yf,r}}{\gamma_{M0}}\left(h_w + \frac{t_1+t_2}{2}\right)}_{tension\ flange}; \underbrace{\frac{b_1 t_1 f_{yf,r}}{\gamma_{M0}}\left(h_w + \frac{t_1+t_2}{2}\right)}_{compression\ flange}; \underbrace{\frac{b_1 t_1 \chi f_{yf}}{\gamma_{M1}}\left(h_w + \frac{t_1+t_2}{2}\right)}_{compression\ flange} \right\} \quad \text{(D.1)}$$

where $f_{yf,r}$ is the value of yield stress reduced due to transverse moments in the flanges

$f_{yf,r} = f_{yf} f_T$

$$f_T = 1 - 0{,}4\sqrt{\frac{\sigma_x(M_z)}{\frac{f_{yf}}{\gamma_{M0}}}}$$

$\sigma_x(M_z)$ is the stress due to the transverse moment in the flange

$\chi$ is the reduction factor for out of plane buckling according to 6.3 of EN 1993-1-1

**NOTE 1:** The transverse moment $M_z$ results from the shear flow in flanges as indicated in Figure D.2.

**NOTE 2:** For sinusoidally corrugated webs $f_T$ is 1,0.

Documento contenuto nel prodotto EUROCODICI edizione 2011. E' vietato l'uso in rete del singolo documento e la sua riproduzione. E' autorizzata la stampa per uso interno.



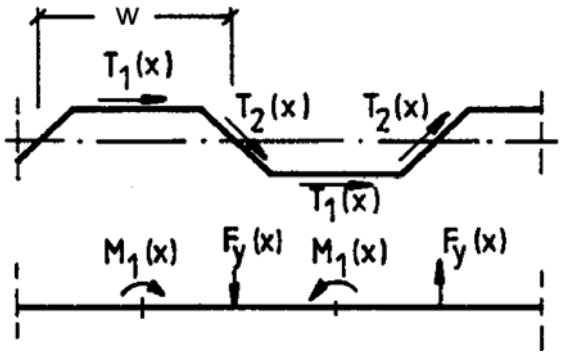


**Figure D.2: Transverse actions due to shear flow introduction into the flange**

(2) The effective[p] area of the compression flange should be determined from 4.4(1) using the larger value of the slenderness parameter $\bar{\lambda}_p$ defined in 4.4(2). The buckling factor $k_\sigma$ should be taken as the larger of:

a) $$k_\sigma = 0{,}43 + \left(\frac{b}{a}\right)^2 \qquad \text{(D.2)}$$

where $b$ is the maximum width of the outstand from the toe of the weld to the free edge

$$a = a_1 + 2a_4$$

b) $$k_\sigma = 0{,}60 \qquad \text{(D.3)}$$

where $\bar{b} = \dfrac{b_1}{2}$

### D.2.2 Shear resistance

(1) The shear resistance $V_{Rd}$ should be taken as:

$$V_{Rd} = \chi_c \frac{f_{yw}}{\gamma_{M1}\sqrt{3}} h_w t_w \qquad \text{(D.4)}$$

where $\chi_c$ is the lesser of the values of reduction factors for local buckling $\chi_{c,\ell}$ and global buckling $\chi_{c,g}$ obtained from (2) and (3)

(2) The reduction factor $\chi_{c,\ell}$ for local buckling should be calculated from:

$$\chi_{c,\ell} = \frac{1{,}15}{0{,}9 + \bar{\lambda}_{c,\ell}} \leq 1{,}0 \qquad \text{(D.5)}$$

where $$\bar{\lambda}_{c,\ell} = \sqrt{\frac{f_y}{\tau_{cr,\ell}\sqrt{3}}} \qquad \text{(D.6)}$$

$$\tau_{cr,\ell} = 4{,}83\, E \left[\frac{t_w}{a_{\max}}\right]^2 \qquad \text{(D.7)}$$

$a_{\max}$ should be taken as the greater of $a_1$ and $a_2$.

Documento contenuto nel prodotto EUROCODICI edizione 2011. E' vietato l'uso in rete del singolo documento e la sua riproduzione. E' autorizzata la stampa per uso interno.



**NOTE:** For sinusoidally corrugated webs the National Annex may give information on the calculation of $\tau_{cr,\ell}$ and $\chi_{c,\ell}$.

The use of the following equation is recommended:

$$\tau_{cr,\ell} = (5{,}34 + \frac{a_3 s}{h_w t_w}) \frac{\pi^2 E}{12(1-\nu^2)} \left[\frac{t_w}{s}\right]^2$$

where $w$ is the length of one half wave, see Figure D.1,

$s$ is the unfolded length of one half wave, see Figure D.1

(3) The reduction factor $\chi_{c,g}$ for global buckling should be taken as

$$\chi_{c,g} = \frac{1{,}5}{0{,}5 + \bar{\lambda}_{c,g}^2} \leq 1{,}0 \qquad \text{(D.8)}$$

where $\bar{\lambda}_{c,g} = \sqrt{\dfrac{f_y}{\tau_{cr,g}\sqrt{3}}}$ (D.9)

$$\tau_{cr,g} = \frac{32{,}4}{t_w\, h_w^2} \sqrt[4]{D_x\, D_z^3} \qquad \text{(D.10)}$$

$$D_x = \frac{E\, t_w^3}{12\left(1-\nu^2\right)} \frac{w}{s}$$

$$D_z = \frac{E\, I_z}{w}$$

$I_z$ second moment of area of one corrugation of length $w$, see Figure D.1

**NOTE 1:** $s$ and $I_z$ are related to the actual shape of the corrugation.

**NOTE 2:** Equation (D.10) is valid for plates that are assumed to be hinged at the edges.

### D.2.3 Requirements for end stiffeners

(1) Bearing stiffeners should be designed according to section 9.

Documento contenuto nel prodotto EUROCODICI edizione 2011. E' vietato l'uso in rete del singolo documento e la sua riproduzione. E' autorizzata la stampa per uso interno.



# Annex E [normative] – Alternative methods for determining effective cross sections

## E.1 Effective areas for stress levels below the yield strength

(1) As an alternative to the method given in 4.4(2) the following formulae may be applied to determine effective areas at stress levels lower than the yield strength:

a) for internal compression elements:

$$\rho = \frac{1 - 0{,}055(3+\psi)/\bar{\lambda}_{\mathrm{p,red}}}{\bar{\lambda}_{\mathrm{p,red}}} + 0{,}18\frac{\left(\bar{\lambda}_{\mathrm{p}} - \bar{\lambda}_{\mathrm{p,red}}\right)}{\left(\bar{\lambda}_{\mathrm{p}} - 0{,}6\right)} \quad \text{but } \rho \leq 1{,}0 \tag{E.1}$$

b) for outstand compression elements:

$$\rho = \frac{1 - 0{,}188/\bar{\lambda}_{\mathrm{p,red}}}{\bar{\lambda}_{\mathrm{p,red}}} + 0{,}18\frac{\left(\bar{\lambda}_{\mathrm{p}} - \bar{\lambda}_{\mathrm{p,red}}\right)}{\left(\bar{\lambda}_{\mathrm{p}} - 0{,}6\right)} \quad \text{but } \rho \leq 1{,}0 \tag{E.2}$$

For notations see 4.4(2) and 4.4(4). For calculation of resistance to global buckling 4.4(5) applies.

## E.2 Effective areas for stiffness

(1) For the calculation of effective areas for stiffness the serviceability limit state slenderness $\bar{\lambda}_{p,ser}$ may be calculated from:

$$\bar{\lambda}_{p,ser} = \bar{\lambda}_p \sqrt{\frac{\sigma_{com,Ed,ser}}{f_y}} \tag{E.3}$$

where $\sigma_{\mathrm{com,Ed,ser}}$ is defined as the maximum compressive stress (calculated on the basis of the effective cross section) in the relevant element under loads at serviceability limit state.

(2) The second moment of area may be calculated by an interpolation of the gross cross section and the effective cross section for the relevant load combination using the expression:

$$I_{eff} = I_{gr} - \frac{\sigma_{gr}}{\sigma_{com,Ed,ser}}\left(I_{gr} - I_{eff}\left(\sigma_{com,Ed,ser}\right)\right) \tag{E.4}$$

where $I_{\mathrm{gr}}$ is the second moment of area of the gross cross section

$\sigma_{\mathrm{gr}}$ is the maximum bending stress at serviceability limit states based on the gross cross section

$I_{\mathrm{eff}}(\sigma_{\mathrm{com,Ed,ser}})$ is the second moment of area of the effective cross section with allowance for local buckling according to E.1 calculated for the maximum stress $\sigma_{\mathrm{com,Ed,ser}} \geq \sigma_{\mathrm{gr}}$ within the span length considered.

(3) The effective second moment of area $I_{\mathrm{eff}}$ may be taken as variable along the span according to the most severe locations. Alternatively a uniform value may be used based on the maximum absolute sagging moment under serviceability loading.

(4) The calculations require iterations, but as a conservative approximation they may be carried out as a single calculation at a stress level equal to or higher than $\sigma_{\mathrm{com,Ed,ser}}$.

Documento contenuto nel prodotto EUROCODICI edizione 2011. E' vietato l'uso in rete del singolo documento e la sua riproduzione. E' autorizzata la stampa per uso interno.

**UNI**
**Ente Nazionale Italiano di Unificazione**
Via Sannio, 2
20137 Milano, Italia

Riproduzione vietata - Legge 22 aprile 1941 Nº 633 e successivi aggiornamenti.